Compuprint 9090

User Manual

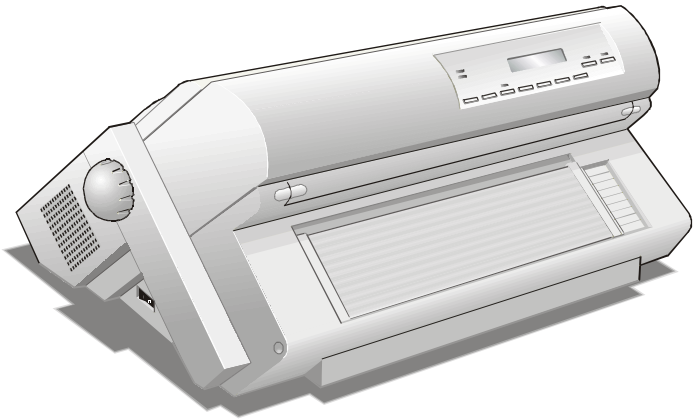

Rev. 002

Compuprint Products Information

Thanks *for choosing the* **Compuprint 9090** *printer.*

Your printer is a reliable working equipment that will be very useful in your daily job.

Our printers have been designed to be compact and respectful of the work environment. They offer a wide range of features and multiple functions that confirm the high technological level reached by the printers with Compuprint brand.

To maintain these printing performances unchanged in the long run, Sferal wwt has developed specific Compuprint branded consumables for each printer type (for example: ribbon cartridges for dot matrix printers, toner and OPC cartridges for laser printers, bubble ink jet cartridges for inkjet printers) that assure an excellent operation with high printing quality level reliability.

Sferal wwt recommends to use only its original Compuprint branded consumables with original packaging (identified by its holographic label). In this way, a proper use of the printer at quality level stated in the product characteristics can be assured. All typical usage problems related to not certified consumables may be avoided, such as an overall quality print level degradation and, often, the reduction of the product life due to the fact that the proper working conditions for the print heads, OPC cartridge and other printer parts are not assured.

Moreover, Sferal does not only certify its consumables in terms of working conditions but also carefully controls their compliance with the international standard rules concerning:

- *no cancerous materials;*
- *no flammability of the plastic materials;*
- *other standards*

Sferal advises the customers not to use products for which the compliance to this safety rules are not warranted. Finally seek your dealer or contact a Sferal office and be sure that are provided you the original Compuprint branded consumables.

Safety Information

A. Never remove any printer cover except to install a printer accessory and as expressly described in this manual.

B. Please store the printer covers in a safe place. The covers must be reinstalled if you decide to remove any printer accessory.

The following areas of the printer should be covered for safety reasons:

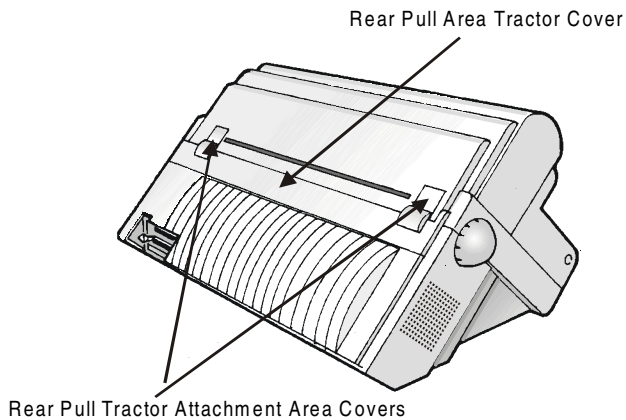

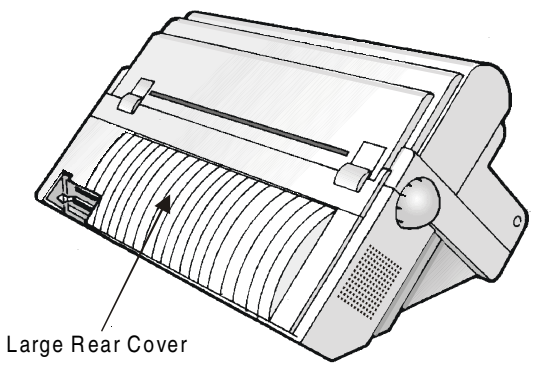

The above openings must always be protected with their cover when the corresponding option is not installed. Do not touch inside and do not insert any object into these openings or into the gears.

FFC Notes

This equipment has been tested and found to comply with the limits for a Class B digital device, pursuant to Part 15 of the FCC Rules. These limits are designed to provide reasonable protection against harmful interference when the equipment is operated in a commercial environment. This equipment generates, uses and can radiate radio frequency energy and, if not installed and used in accordance with the instruction manual, may cause harmful interference to radio communications. However, there is no guarantee that interference will not occur in a particular installation. If this equipment does cause harmful interference to radio or television reception, which can be determined by turning the equipment off and on, the user is encouraged to try to correct the interference by one or more of the following measures:

- Reorient or relocate the receiving antenna.
- Increase the separation between the equipment and the receiver.
- Connect the equipment into an outlet on a circuit different from that to which the receiver is connected
- Consult the dealer or an experienced radio/TV technician for help.

A shielded Centronics IEEE1284 compliant bi-directional parallel cable, maximum length 3 meters (10 feet), and a shielded RS-232 serial cable, maximum length 15 meters (50 feet), are necessary for this device to meet the requirements of a Class B digital device pursuant to part 15 of the FCC rules.

The above specified cables are readily available as Personal Computer or Peripheral accessories from multiple retail outlets. Please consult your dealer for details concerning such cables and also for information about FCC rules for digital devices.

Changes or modifications to the device covered by this manual, which are not expressly approved by the party responsible for compliance, could void the user's authority under the FCC rules to operate the equipment.

Canadian D.O.C. Radio Interference Regulation

This digital apparatus complies with the Canadian ICES-003 Class B limits for radio frequency emissions.

Cet appareil numérique est conforme aux limites de Classe B de la norme NMB-003 du Canada.

EEC Regulations

This equipment conforms to the EEC Directive 89/392 (the sound pressure, measured according to ISO 7779, does not exceed 70 dBA)

.

Table of Contents

Getting to Know Your Printer

Printer Features

- 24 Needle Print Head
- 136 columns @10 cpi
- High Speed Draft printing at 900 cps, LQ printing at 133 cps
- IBM Proprinter XL24/XL24 AGM, Personal Printer 2391+ and EPSON LQ Series emulations
- Multiple copies (1 original and 7 copies)
- Automatic paper path selection
- Easy operability via operator panel setup and S/W commands
- Usage of all specific features by means of the Specific Software Driver which is applicable to the most popular S/W Packages
- Plug & Play capability for Windows 95/98/2000/XP/NT4.0/Millennium ®
- Bi-directional IEEE 1284 parallel interface and standard serial RS-232/C and RS-422/A interface
- Ethernet 10/100 Base-T interface option that coexists with the parallel interface
- Second Front Push Tractor and Rear Pull Tractor options
- Paper Cutter option
- Two Printer Pedestal options

Unpacking Your Printer

The following items are included in the box:

Notify any damage to your supplier.

Installation Guide

CD-Rom
(*with User Manual included*)

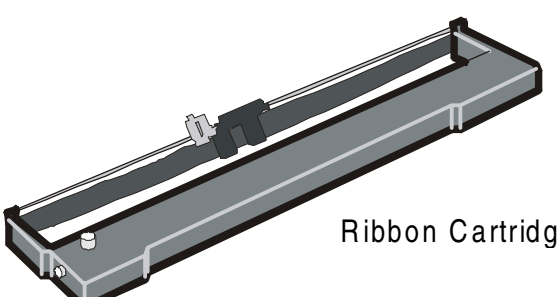

Ribbon Cartridge

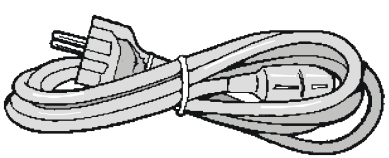

Power Cable

Printer Parts

Front View

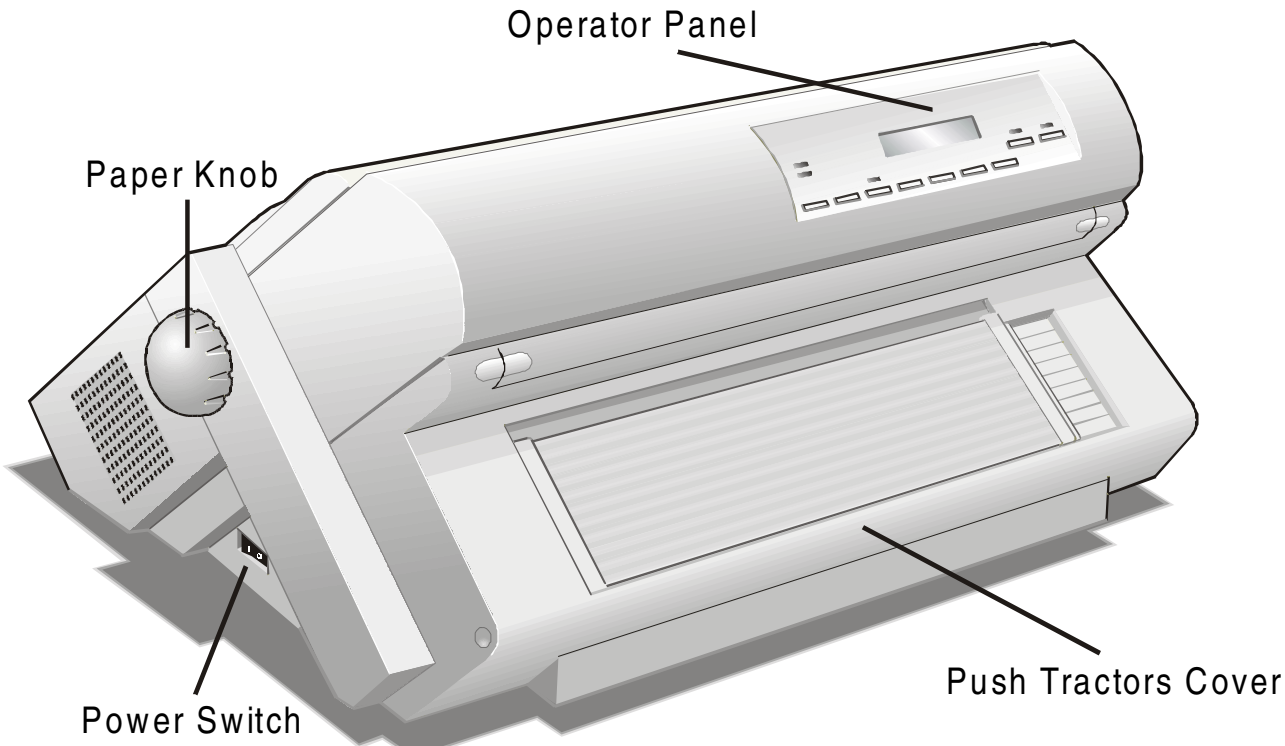

Rear View

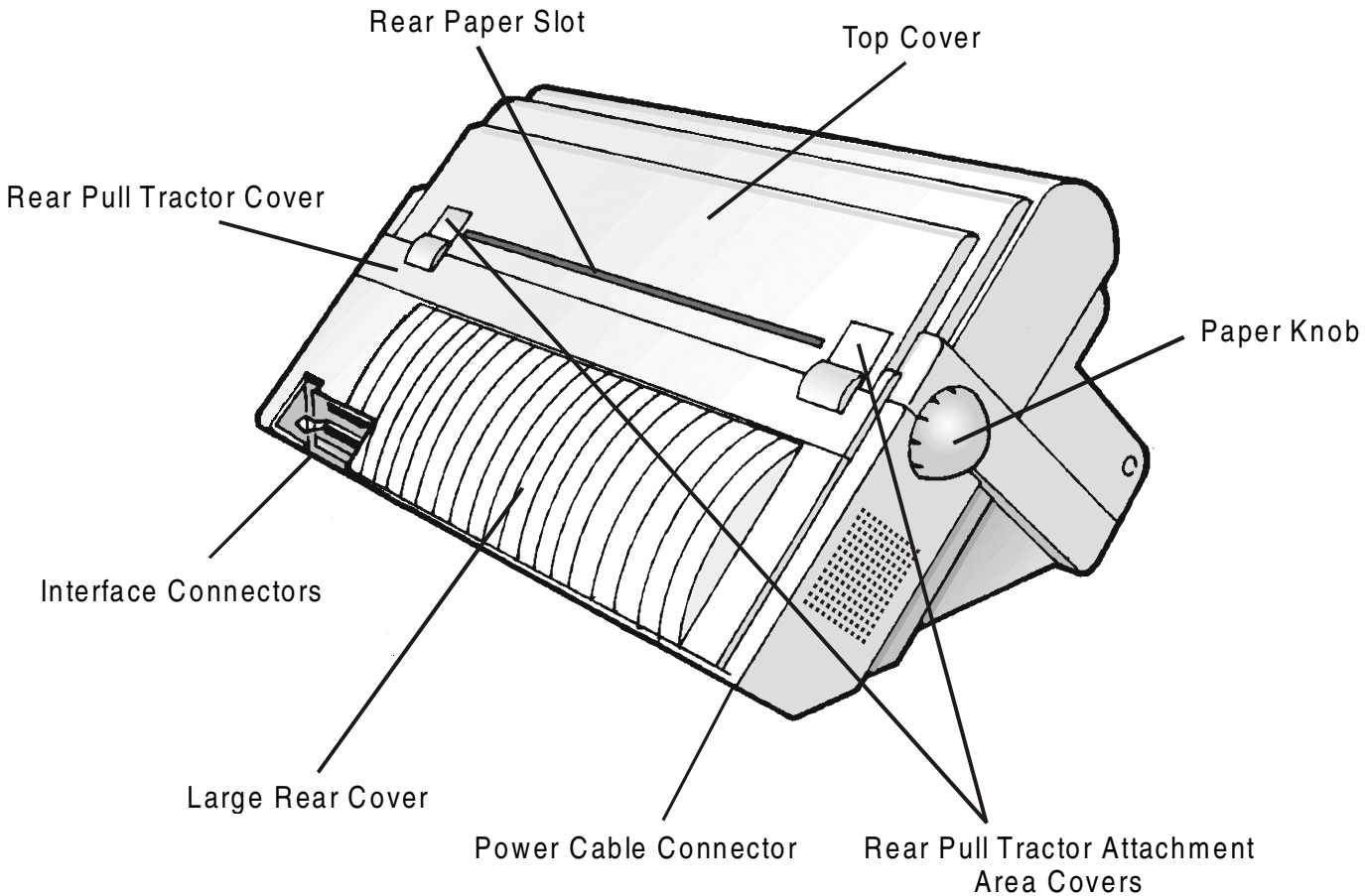
Rear Paper Slot
Top Cover
Rear Pull Tractor Cover
Paper Knob
Interface Connectors
Large Rear Cover
Power Cable Connector
Rear Pull Tractor Attachment Area Covers

Setting Up Your Printer

Choosing a Suitable Location

Consider the following points when you choose the location for your printer:

- The distance between the printer and the host computer must not exceed the length of the interface cable;
- The location must be sturdy, horizontal and stable;
- Your printer must not be exposed to direct sunlight, extreme heat, cold, dust or humidity (see "Printer Specifications" later);
- The power outlet must be compatible with the plug of the printer's power cord.

There must be sufficient clearances on all sides for easy operation. The required space is shown in the figure:

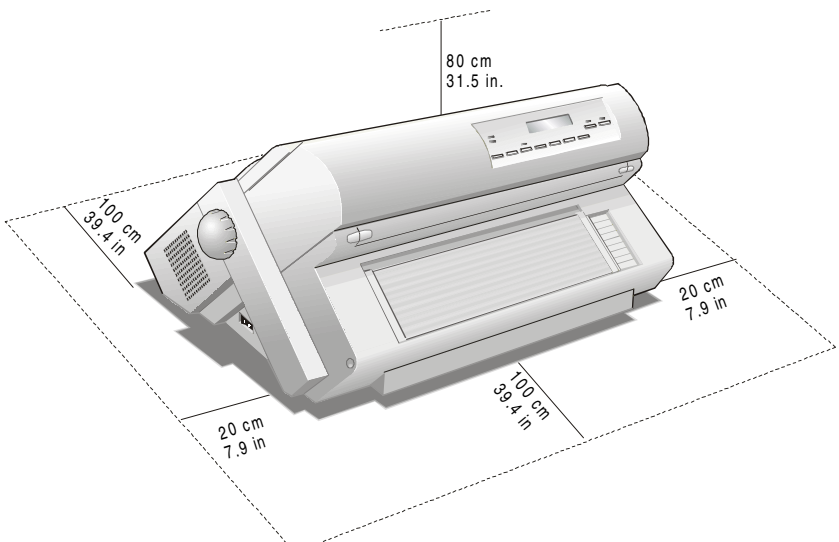

Printer Assembly

Removal of the Shipment Locks

Open all the printer covers and make sure that you remove all the shipment locks from the printer.

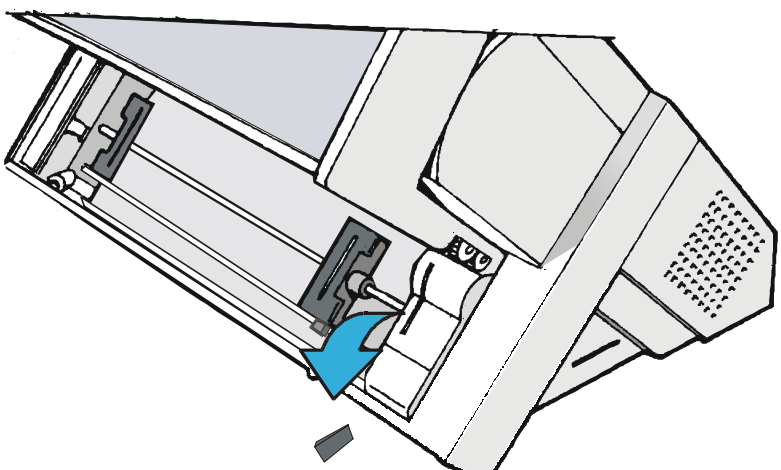

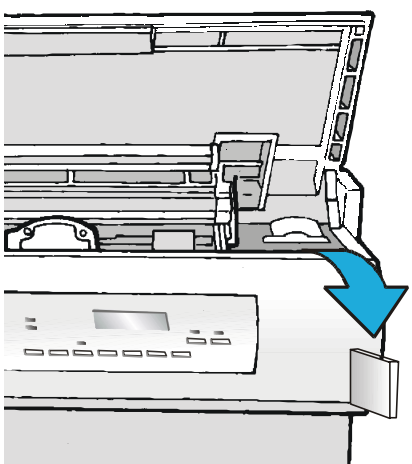

Ribbon Cartridge Installation

Make sure that you are using only Compuprint original consumables.

1. Make sure that the printer is turned off.
2. Find the ribbon cartridge among the accessories

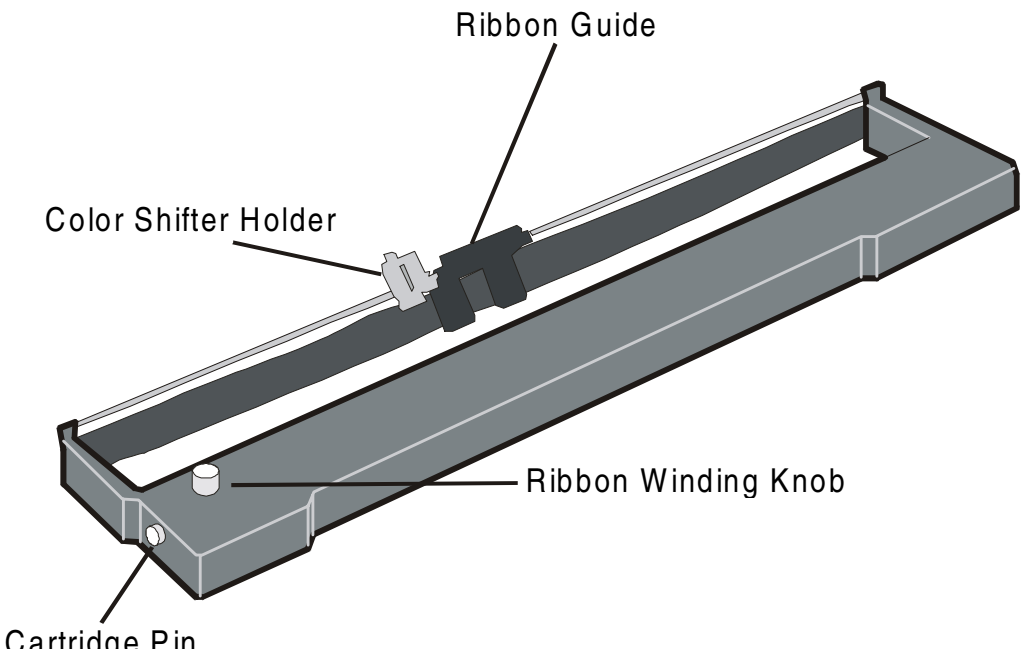

3. Open the top cover using the small handles on either side of the top cover.

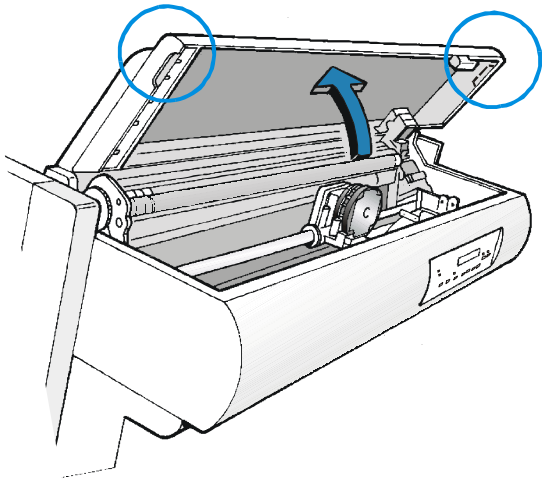

4. Turn the printer on. The print carriage prepares for ribbon cartridge installation.

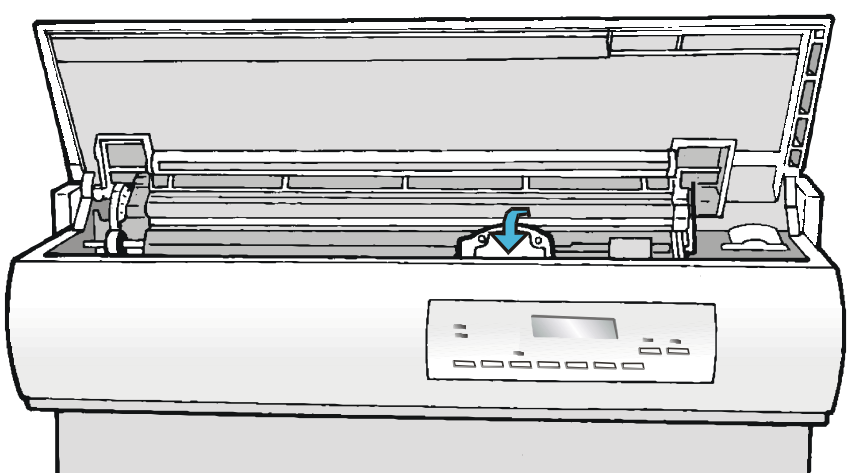

5. Before installing the ribbon cartridge turn the ribbon-winding knob in the arrow direction (located on the cartridge) to take up slack in the ribbon.

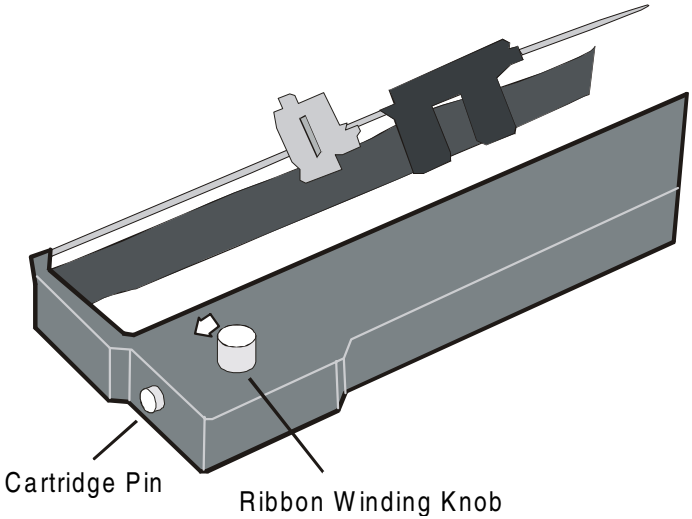

To avoid damage to the ribbon, do not turn the winding knob in the wrong direction.

6. Align the right and left cartridge pins with the printer locking points.

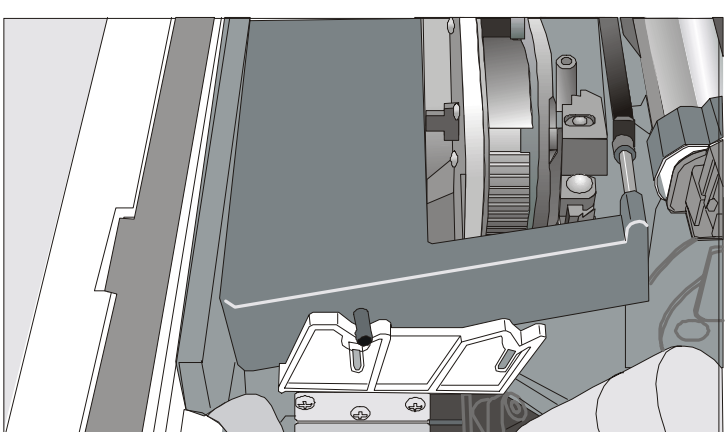

7. Slide and insert the ribbon guide between the print head and the ribbon guide mask holding it perpendicular to the print head.

Make sure that the ribbon is inserted correctly between the print head and the print head mask.

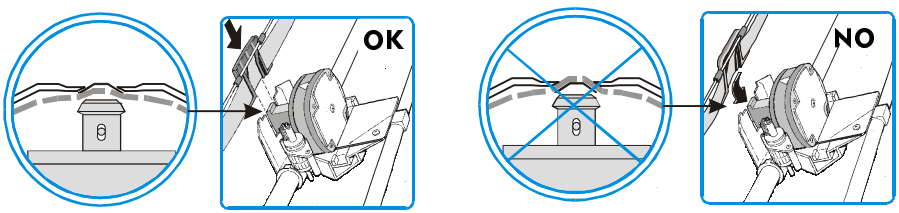

8. Insert the shifter holder onto the color shifter as shown in this figure.

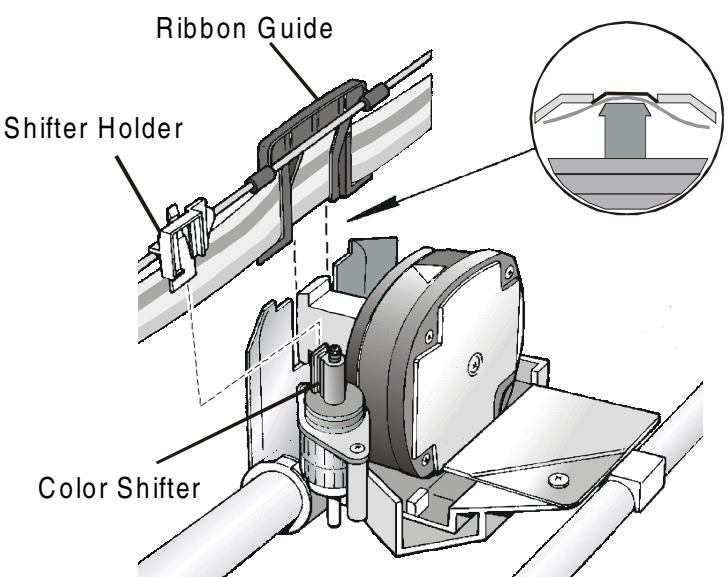

9. Turn the ribbon-winding knob in the arrow direction (located on the cartridge) to take up slack in the ribbon.

10. Push the cartridge down gently until it clips into place at locking points.

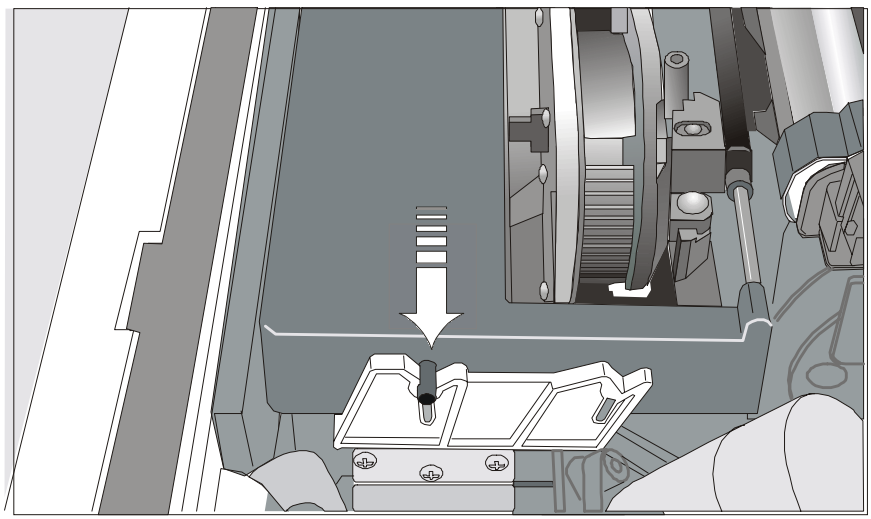

11. Turn the ribbon-winding knob again in the direction of the arrow to take up slack in the ribbon.

12. To ensure that the ribbon guide runs freely along the ribbon, manually move the print carriage horizontally.

If the used ribbon cartridge needs to be replaced, see "Replacing The Ribbon Cartridge", later in this manual.

Host Computer Connection

This printer can be connected to your host computer via two available interfaces. The interface connectors are located on the rear of the printer.

- A bidirectional IEEE1284 parallel interface
- A RS-232C/422A serial interface

Before connecting the interface cable, make sure that the printer and the host computer are turned OFF .

Insert the *parallel interface cable* into the parallel connector and fasten it by means of the clips.
Insert the *serial interface cable* into the serial connector and fasten it by means of the two screws (use the screwdriver).

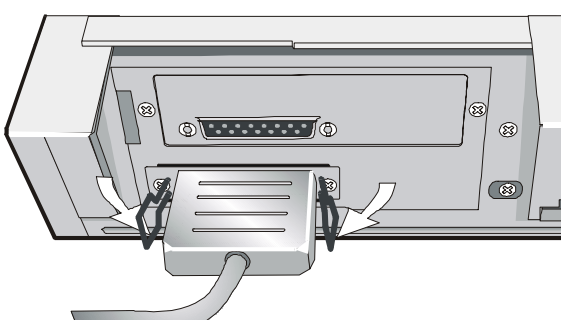

Parallel Interface

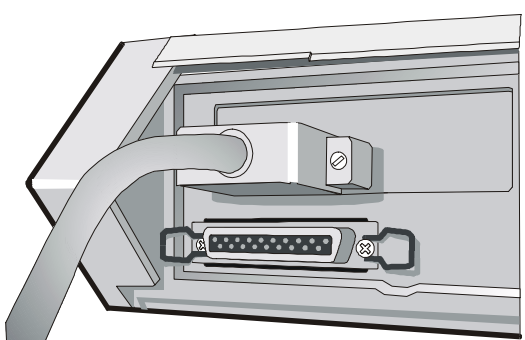

Serial Interface

Software Driver Selection

At this point it is necessary to configure your printer for your application package. The installation procedures depend upon the host environment.

Follow the instructions in the *readme* file you find on the CD-ROM.

In a WINDOWS 95/98/2000/XP/NT4.0/Millennium® environment the printer supports the Plug & Play feature.

The printer drivers of all Compuprint printers can be found at the Internet Address http://www.compuprint.net/

Power Connection

The power outlet must be compatible with the plug of the printer's power cable.

Always use a grounded outlet.

1. Make sure the power outlet is near the printer location and easily accessible.

2. Make sure that the power switch is in *0 position* (OFF).

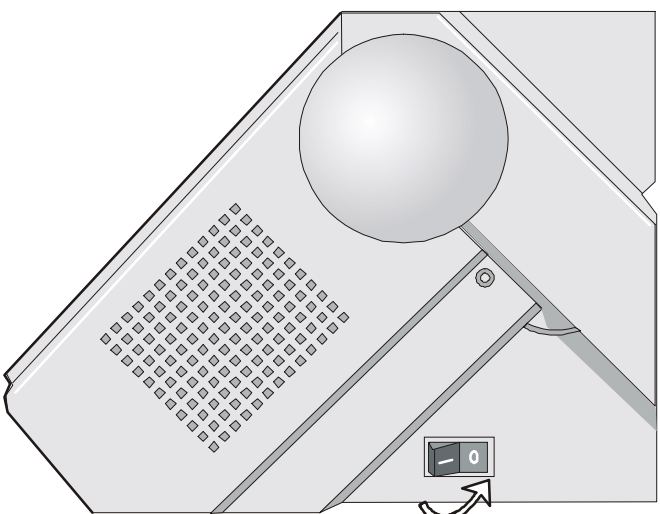

3. Insert the power cable plug into the printer connector and the other power cable end into a convenient outlet (the figure shows the European version).

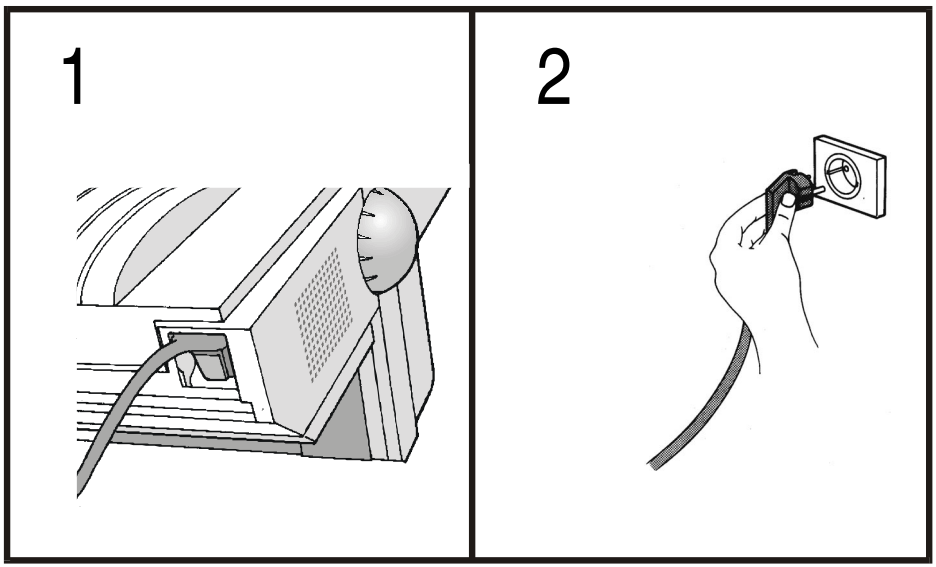

4. If you need to turn the printer on, press the power switch in the *I position* (ON).

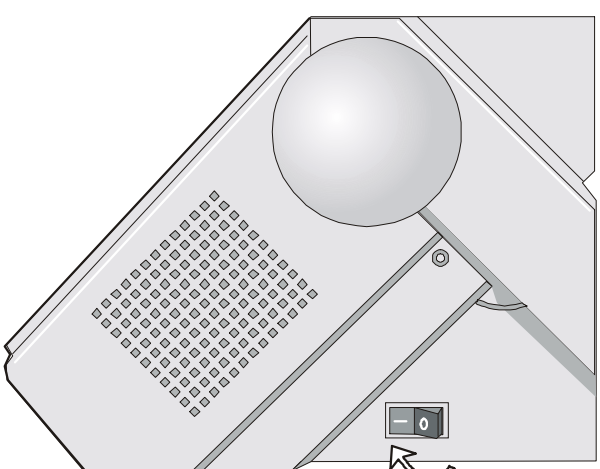

Selecting the Display Language

The display messages for this printer can be displayed in five different languages: English (Default), French, German, Italian and Spanish. To select the language, that you prefer, proceed as follows:

1. Press the PROGRAM key and keep it pressed while powering on the printer until the following message will be displayed:

   RELEASE KEY

2. When you release the PROGRAM key, the following messages will be displayed:

   9090

   then,

   PRINT OUT? NO

3. Press the ↓ key to enter the setup. The first setup item is displayed:

   EMUL. OPTIONS

4. Press the ↓ key until the language first level function is displayed:

   FUNCTIONS

5. Press the → key to pass to the second level functions:

   BUZZER YES

6. Press the ↓ key until the setup language is displayed:

   MENU ENGLISH

7. Press the → key to scroll the setup languages. When the desired language is displayed, press the PROGRAM key to select it. The printer exits the setup. From now on the display messages appear in the selected language.

Configuring the Printer

Operator Panel Presentation

The operator panel enables you to perform many of the printer functions including paper path selections, font selection and the printer setup.

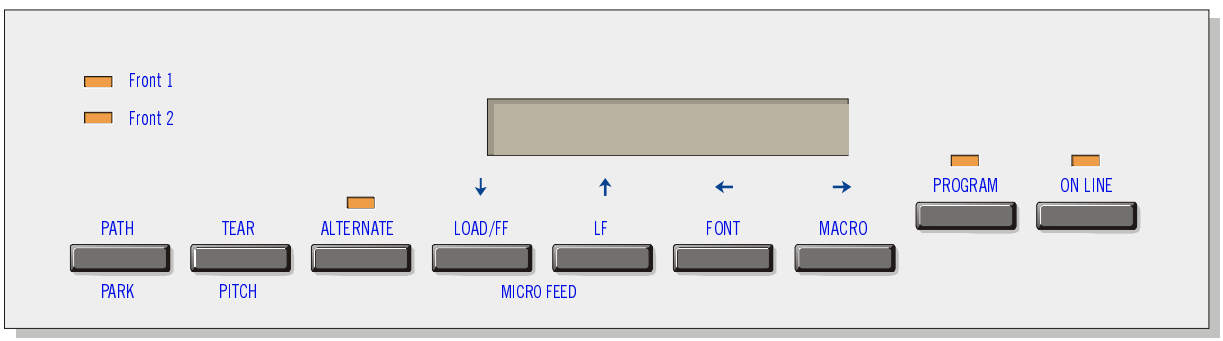

The operator panel consists of:

- A 16 character display (Liquid Crystal Display)
- Five led indicators
- Nine function keys

Display Messages

The printer display is used to indicate the printer status or to request an user intervention. When the printer is in Ready state, the display gives the following information:

- when paper is already loaded and the printer is off line (ON LINE indicator unlit):

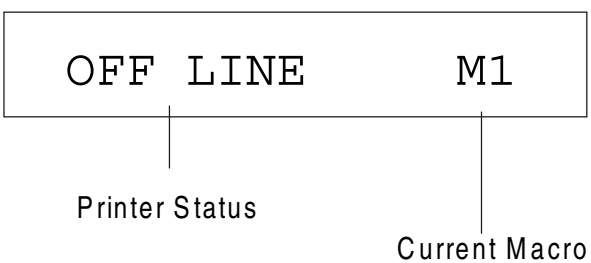

- when paper is already loaded and the printer is on line (ON LINE indicator lit):

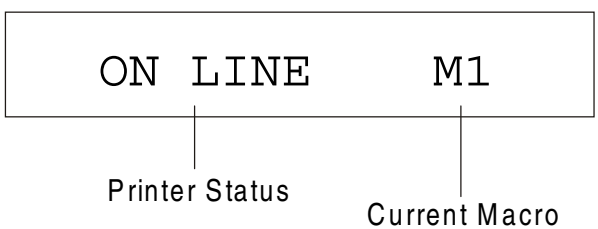

where:

OFF LINE ON LINE	Indicates the printer status.
M1, M2, M3, M4	Indicate which of the four User Macros is currently used.

- when there is no paper loaded and the printer is off line (ON LINE indicator unlit):

```
Load Front1
```

Current Paper Path

- when there is no paper loaded and the printer is on line (ON LINE indicator lit):

```
ON LINE     M1
```

Printer Status

Current Macro

where:

LOAD FRONT 1 LOAD FRONT 2 LOAD PUSH-PULL	Indicates that the currently selected paper path is out of paper. The messages are displayed only for the available paper paths, according to the installed devices.
OFF LINE ON LINE	Indicates the printer status.
M1, M2, M3, M4	Indicate which of the four User Macros is currently used.

The following messages appear to indicate other printer conditions or user intervention requests. The list is in alphabetical order.

Message	Description
ALTERNATE	This message appears to indicate that the Alternate functions of the operator panel keys have been selected pressing the ALTERNATE key.
BUSY M1	This message appears to indicate that the printer is printing. It is busy.
COVER OPEN CLOSE COVER	When the printer cover is not closed correctly, the buzzer sounds and the display shows alternately these two messages. Close the printer cover.
EJECTING	The printer is ejecting the paper out of the printer.
INITIALIZING LAN	This message is displayed when the LAN is reset (only if the LAN interface board is installed).
LOAD FRONT1 LOAD FRONT2 LOAD PUSH-PULL	These messages are displayed when the corresponding paper path is out of paper.
LOCKED MENU	When the access to the Printer Setups has been locked at the power on, the printer displays this message.
MACRO CHANGING	The macro has been changed and the printer is updating the settings.
MICRO FEED DOWN	The paper is fed in microsteps downwards when pressing the ↓ arrow key .
MICRO FEED UP	The paper is fed in microsteps forwards when pressing the ↑ arrow key.

Message	Description
OPT. I/F CHANGED PRESS ON LINE	These messages are displayed at power on when the I/F board option has been changed previously in the printer. Press the ON LINE key to confirm.
OPER. INTERRUPTED	This message is displayed if the ALTERNATE key has been pressed to interrupt a park procedure.
PARKING	The printer is parking the fanfold paper.
PATH CHANGING	The path has been changed and the printer is updating the settings.
PRESS A KEY NVM CHANGED	The NVM has been changed. Press any key to set the printer.
RELEASE KEY	This message is displayed when you can release the PROGRAM key in the Self-test selection or in the Power-on Configuration procedure.
REMOTE CONTROL	This message is displayed when the printer operates from remote control (only if the LAN interface board is installed).
RESET & BREAK	The printer received a reset and break command via interface.
SELF TEST	Printing the self-test page.
TEAR IF NECESS. EJECT PAPER	These messages are displayed when the printer receives a paper parking command and the TEAR NO item is selected for the tear-off function. Tear off the fanfold then press the PARK key to eject the paper.
TEAR IF NECESS. PARK PAPER	These messages are displayed when the printer receives a paper parking command. Tear off the fanfold paper if necessary and then press the PARK key to park the paper.

Message	Description
TEAR OFF PAPER EJECT PAPER	These messages are displayed when the printer receives a paper ejecting command (TEAR NO item has been selected for the tear-off function) but was not able to execute it, because the paper to be ejected is longer than 18 inch. Tear off the fanfold paper and then press the PARK key to eject the paper.
TEAR OFF PAPER PARK PAPER	These messages are displayed when the printer has received a paper parking command but was not able to execute it, because the paper to be parked is longer than 18 inch. Tear off the fanfold paper and then press the PARK key to park the paper.
UNLOCKED MENU	When the access to the Printer Setups has been unlocked at the power on, the printer displays this message.

For the error messages see "Error Handling" later in this manual.

Indicators

ON LINE	Lit when the printer can receive and print data (printer online). Blinks when there is data in the buffer and the printer is offline. Unlit when the printer is disabled and the buffer does not contain any data, or during the initialization, setup or tests.
PROGRAM	Blinks when one of the printer setup procedures has been selected: *Program Configuration* or *Power-On Configuration*.
ALTERNATE	Lit when the alternate function of the keys has been enabled pressing the ALTERNATE key.

Front 1	Lit when the Front1 paper path or the Push-pull paper path is selected. Unlit when neither the Front1 paper path nor Push-pull paper path are selected.
Front 2	Lit when the Front2 paper path is selected. Unlit when the Front2 paper is not selected.

Function Keys

Pressing the function keys it is possible to activate the functions indicated by the word or symbol signed near the key. Each key may have different functions, according to the selected function modes: *Normal*, *Alternate* or *Program*.

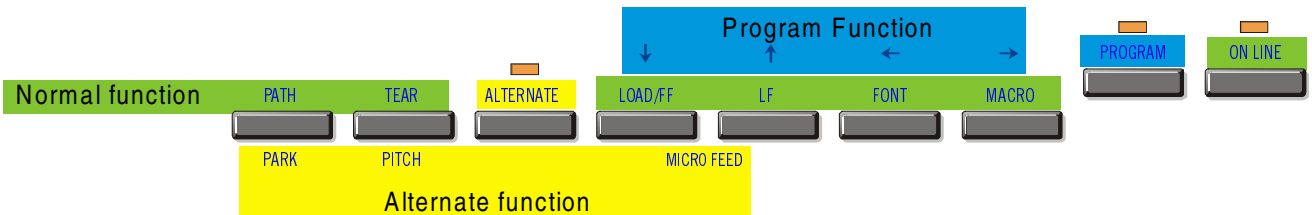

Normal Function

The *normal* function of the keys is written above the keys and does not require any previous action to select it.

Alternate Function

The *alternate* function of the keys is written below the keys and is selected pressing the ALTERNATE key.

When the alternate function of the keys is selected, the ALTERNATE indicator is lit and the display shows ALTERNATE.

Program Function

The *program* function of the keys is selected pressing the PROGRAM key, where:

- If you press the key while powering the printer on, the *Power-On Configuration* is selected.
- If you press the key when the printer is enabled without printing or disabled (ON LINE indicator unlit), the *Program Setup* is selected.

In the Program Setup mode only the four arrow keys and the PROGRAM key are enabled and the PROGRAM indicator is lit.

ON LINE Key

ON LINE	Normal Function	Enables or disables the printer. • If this key is pressed while powering the printer on, the self test is printed; the printout is stopped pressing this key again. • In an error condition, once the error cause has been removed, press this key to enable the printer
	Program Function	Pressing this key, the input buffer is cleared an a break (250 msec.) on a serial interface is sent. The message `RESET & BREAK` is displayed.

PROGRAM Key

PROGRAM	Normal Function	Enables the printer setups as follows: • Pressing this key while powering on the printer, the *Power-On Configuration* is selected. • Pressing this key when the printer is enabled without printing or disabled the *Program Setup* is enabled (PROGRAM indicator lit).
	Program Function	Exits the printer setups.

MACRO Key

MACRO	Normal Function	Selects one of the user macros (Macro 1, Macro 2, Macro 3 or Macro 4). If you want to select the displayed macro, wait for 2 seconds without pressing any key and the parameters of this macro will be set .
→	Program Function	Scrolls the parameters of the functions or macros forwards.

FONT Key

FONT	Normal Function	Selects the font to be used with the currently selected pitch. The selected font is valid until the printer is turned off or a new font is selected using this key.
←	Program Function	Scrolls the parameters of the functions or macros backwards.

LF Key

LF	Normal Function	Performs a line feed according to the current line spacing settings.
MICRO FEED	Alternate Function	Moves the paper forward in microsteps. Keeping the key pressed the paper is moved continuously at increasing speed.
↑	Program Function	Scrolls the setup and macro functions backwards.

LOAD/FF Key

LOAD/FF	Normal Function	Executes a Form Feed (FF): when paper is loaded into the printer, it advances to the following page; if no paper is loaded, it is positioned for printing.
MICRO FEED	Alternate Function	Moves the paper backward in microsteps. Keeping the key pressed the paper is moved continuously at increasing speed.
↓	Program Function	Scrolls the setup and macro functions forwards.

ALTERNATE Key

ALTERNATE	Normal Function	Enables the alternative key functions. If the printer is receiving print data, press the ON LINE key before pressing the ALTERNATE key. If no printing data are in the print buffer, pressing the ALTERNATE key, the printer goes offline. The display then shows `ALTERNATE` to indicate that the Alternate Function of the keys is enabled (ALTERNATE indicator lit). May be used to abort paper parking procedure. See also "How to Handle the Paper Parking", later in this manual. When the printer is in Program Setup Mode, this key is disabled.
	Alternate Function	Disables the alternative key functions.

TEAR/PITCH Key

TEAR	Normal Function	Moves the paper to the tear-off position (`TEAR NORMAL` function must be selected in the *Program Setup*).
PITCH	Alternate Function	Selects the pitch to be used with the currently selected font. The selected pitch is valid until the printer is turned off.

PATH/PARK Key

PATH	Normal Function	Selects one of the paper paths (`FRONT1`, `FRONT2` or `PUSH-PULL`) in offline status. The parameters of the displayed path are set after 2 seconds without pressing any key.
PARK	Alternate Function	Parks the paper in the currently selected paper path.

Key Combinations

ONLINE + MACRO + ALTERNATE	Normal Function	Lock or unlock the access to the printer setups. See later "How to Lock/Unlock the Printer Setups" section.

Printer Setups

The main printer setup parameters can be selected via the operator panel. The setup parameters are divided into two printer setups, the *Power-On Configuration*, that allows a complete configuration at installation time according to the hardware and the emulation types, and the *Program Setup*, that allows you to set the functions that are the most useful in your daily job. These settings can be selected when the printer is online without printing or offline (ON LINE indicator unlit) and stored in the NVM.

Entering the Printer Setups

- Press the PROGRAM key and keep it pressed at the printer power on until the `RELEASE KEY` message is displayed to select the *Power-On Configuration*.
- Press the PROGRAM key when the printer is online without printing or offline (ON LINE indicator unlit) to select the *Program Setup*.

Moving within the Printer Setups

The arrow keys ↑, ↓, ← , → are used to move within the different functions inside the Printer Setups. See the following description of the setup items.

Leaving the Printer Setups

- Pressing the PROGRAM in the *Power-On Configuration* key the printer exits from the setup and the new settings will be automatically saved.

- Pressing the PROGRAM key in the *Program Setup*, the following choice is offered for the storage of the values set:

`STORE? QUIT`	The new settings are not activated and the old settings remain valid.
`STORE? SAVE`	The new settings are stored permanently in the NVM (Non Volatile Memory).
`STORE? CURRENT`	The new settings remain valid until the printer is turned off.

Press the → or ← keys to scan these selections forward and backwards. When the desired setting is displayed, press the PROGRAM key to exit from the Setup.

Power-On Configuration

The default values of the various functions are indicated in bold.

Entering the Power-On Configuration

1. Make sure that the printer is turned off.
2. Press and hold the PROGRAM key pressed while powering on the printer until the `RELEASE KEY` message is displayed. As soon as the PROGRAM key gets released, the following message will be displayed:

```
9090
```

then,

```
PRINT OUT? NO
```

Main Structure

This figure shows the structure of the *Power-On Configuration* and how to move inside the Setup.

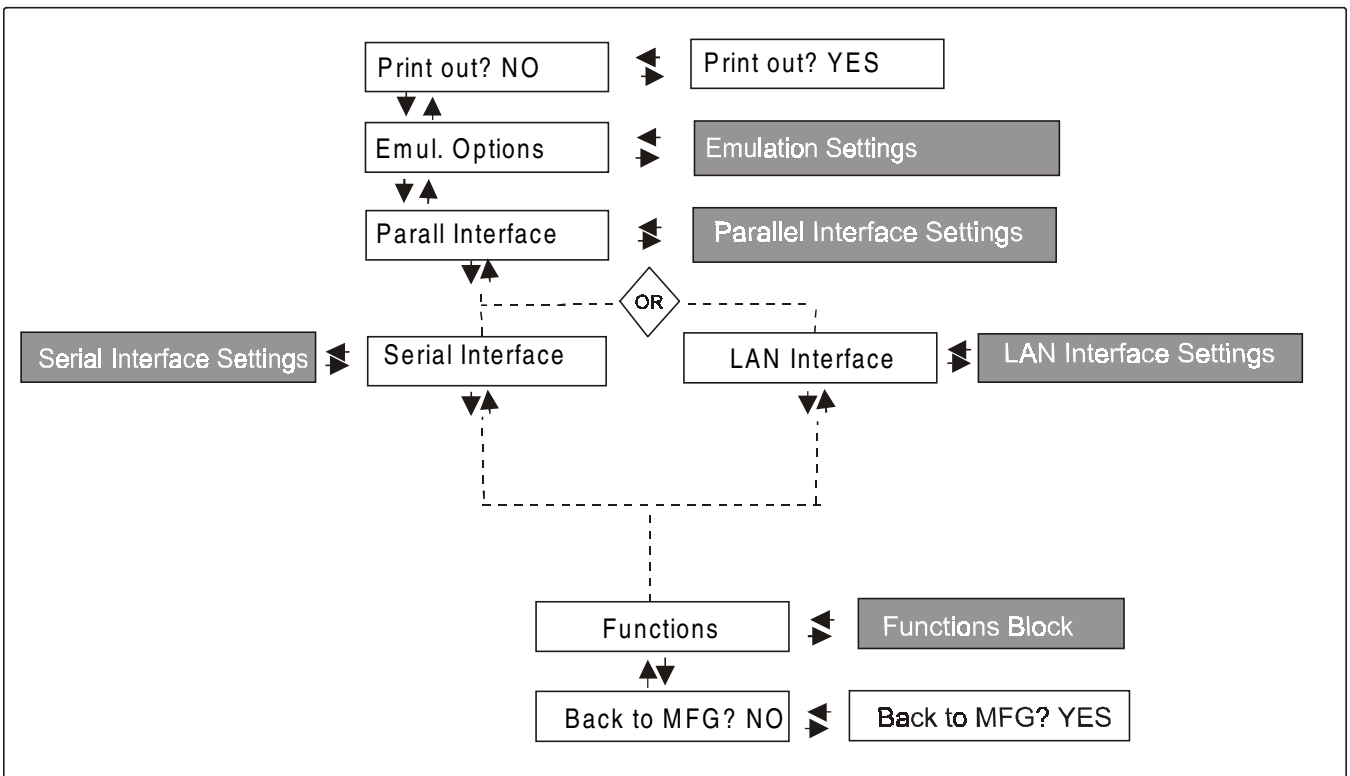

The setup item `Functions` groups the following printer functions:

- Buzzer setting,
- Paper loading sequence,
- Ribbon type,
- Bar code density,
- Text printing direction,
- Graphics printing direction,
- Bar code printing direction,
- Graphics printing speed,
- Paper path at power on,
- Language of the display messages,
- Paper tractor jam sensors,
- Tear-off position adjustment
- Cut position adjustment (if the optional cutter is installed)

Printout of the Printer Settings

PRINT OUT? NO → or ← PRINT OUT? YES

↓

EMUL. OPTIONS

PRINT OUT? NO	The Setup is not printed.
PRINT OUT? YES	The printer setup is printed showing the currently selected values. The printout starts as soon as you select this value.

Emulation Options

This setup defines the available options according to the selected emulation and is structured as follows:

Options

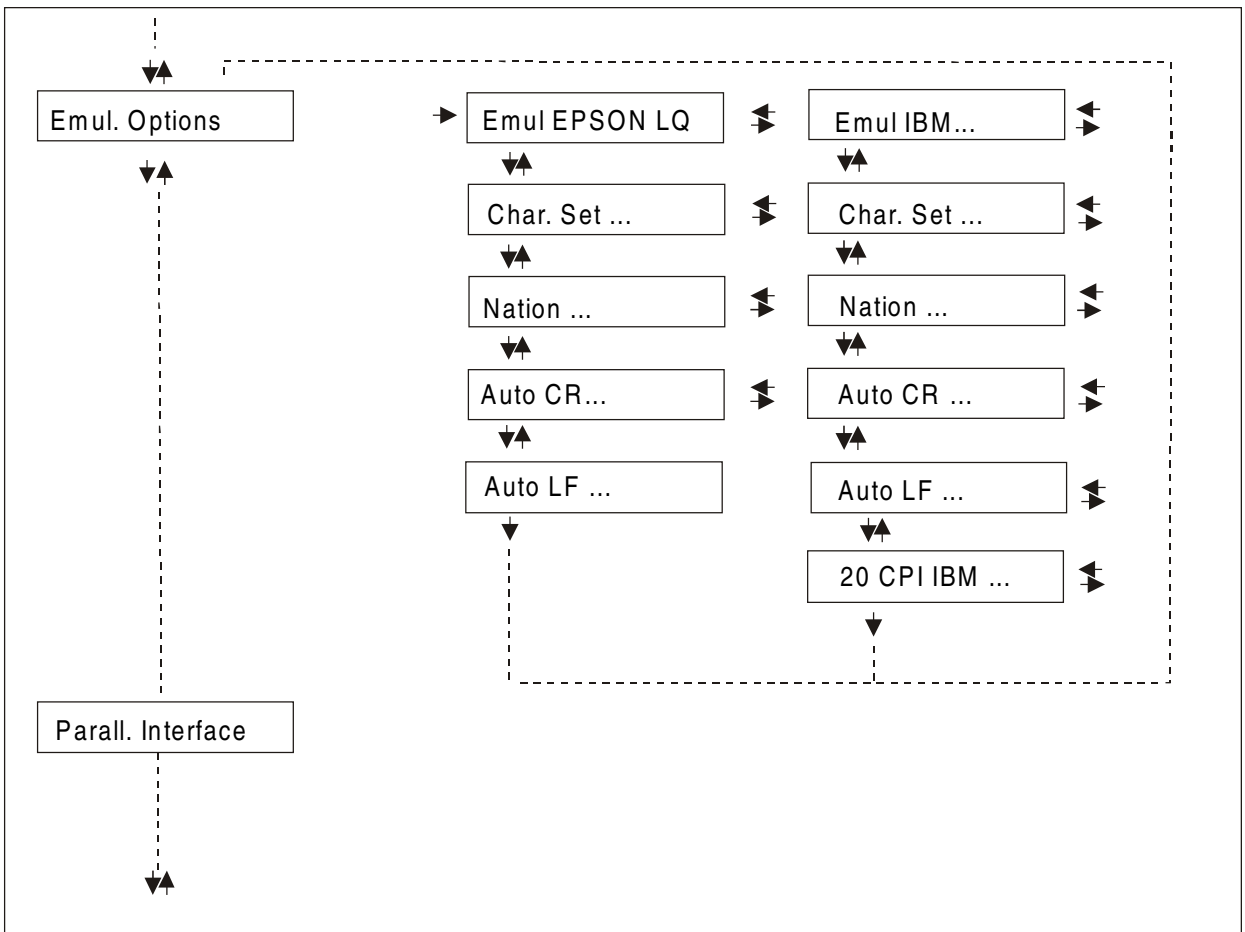

Printer Emulation

PRINT OUT? NO
↑
EMUL. OPTIONS →
↓
PARALL INTERFACE

EMUL. OPTIONS
↑
EMUL. EPSON LQ → or ←
EMUL. IBM XL24 → or ←
EMUL. IBM XL24AGM → or ←
EMUL. IBM 2391 → or ←
↓
CHAR. SET CS2

EMUL EPSON LQ	The printer uses the EPSON Series emulation.
EMUL IBM XL24	The printer uses the IBM Proprinter XL24 emulation.
EMUL IBM XL24AGM	The printer uses the IBM Proprinter XL24 AGM emulation.
EMUL. IBM 2391	The printer uses the IBM Personal 2391+ emulation.

EPSON Character Sets

EMUL. EPSON LQ

↑

CHAR. SET CS1	→ or ←
CHAR. SET CS2	→ or ←
CHAR. SET ITALIC	→ or ←

↓

NATION CP437

These items select the character set to be used in EPSON emulation.

IBM Character sets

EMUL. IBM xxx

↑

CHAR. SET CS1	→ or ←
CHAR. SET CS2	→ or ←

↓

NATION CP437

These items select the character set to be used in IBM Proprinter emulation.

EPSON National Character sets

CHAR. SET CS2

↑

NATION CP437	→ or ←
NATION …	→ or ←
NATION LATIN A1	→ or ←

↓

AUTO CR YES

The following national character sets are available:

CP 437	CP437 G	96GREEK	CP850	CP851	CP 852	CP 853	CP 855
CP 857	CP 858	CP 860	CP 862	CP 863	CP 864	CP 865	CP 866
CP 867	CP 876	CP 877	CP 1250	CP 1251	CP 1252	CP 1253	CP 1254
CP 1255	CP 1256	CP 1257	GOST	TASS	MAZOWIA	ISO 8859/1	ISO 8859/2
ISO 8859/3	ISO 8859/4	ISO 8859/5	ISO 8859/6	ISO 8859/7	ISO 8859/8	ISO 8859/9	ISO 8859/15
CP 437SL	CP 1098	UKRAIN	KOI8-U	USA	FRANCE	GERMANY	ENGLAND
DENMARK1	SWEDEN	ITALY	SPAIN1	JAPAN	NORWAY	DENMARK2	SPAIN2
LATIN A1							

The CP 858 and ISO 8859/15 character sets contain the Euro character.

IBM National Character Sets

CHAR. SET CS2

↑

NATION CP437	→ or ←
NATION …	→ or ←
NATION KOI8-U	→ or ←

↓

AUTO CR NO

The following national character sets can be selected:

CP 437	CP437 G	96GREEK	CP850	CP851	CP 852	CP 853	CP 855
CP 857	CP 858	CP 860	CP 862	CP 863	CP 864	CP 865	CP 866
CP 867	CP 876	CP 877	CP 1250	CP 1251	CP 1252	CP 1253	CP 1254
CP 1255	CP 1256	CP 1257	GOST	TASS	MAZOWIA	ISO 8859/1	ISO 8859/2
ISO 8859/3	ISO 8859/4	ISO 8859/5	ISO 8859/6	ISO 8859/7	ISO 8859/8	ISO 8859/9	ISO 8859/15
CP 437SL	CP 1098	UKRAIN	KOI8-U				

The CP 858 and ISO 8859/15 character sets contain the Euro character.

CR Code Behavior

NATION xxx

↑

AUTO CR NO	→ or ←
AUTO CR YES	→ or ←

↓

AUTO LF NO

AUTO CR NO	No automatic carriage return is performed after a LF, VT or ESCJ code. Default value in IBM Proprinter emulation.
AUTO CR YES	The printer performs an automatic carriage return after a LF, VT or ESCJ code. Default value in Epson emulation.

LF Code Behavior

AUTO CR xx

↑

AUTO LF NO	→ or ←
AUTO LF YES	→ or ←
AUTO LF HOST	→ or ←

↓

20 CPI IBM NO

or

EMUL. OPTIONS

AUTO LF NO	No Automatic LF after CR.
AUTO LF YES	Automatic LF after CR.
AUTO LF HOST	Only in EPSON emulation. The printer checks the AUTOFEEDXT signal coming from the host and executes an automatic LF after CR, if the signal is low.

IBM Compressed Printing

These items are displayed only if the IBM emulation is selected.

AUTO LF NO

↑

20 CPI IBM NO	→ or ←
20 CPI IBM YES	→ or ←

↓

EMUL. OPTIONS

20 CPI IBM NO	The compressed printing is performed at 17.1 cpi.
20 CPI IBM YES	The compressed printing is performed at 20 cpi.

Parallel Interface

This setup defines the use of the parallel interface and is structured according to the interface specific parameters.

Parallel Interface Parameters

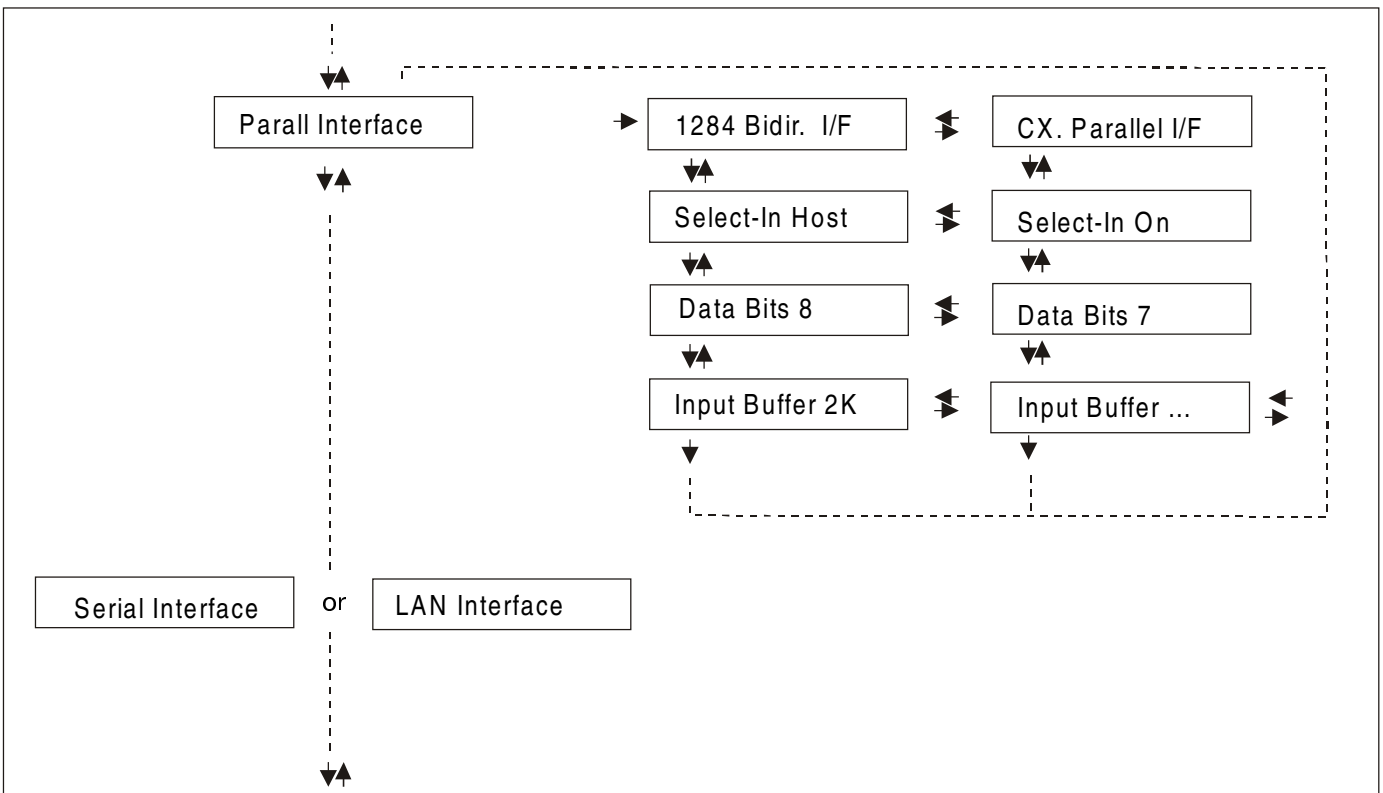

Interface Type

EMUL. OPTIONS
↑
PARALL INTERFACE →
↓
SERIAL INTERFACE
or
LAN INTERFACE

PARALL INTERFACE
↑
1284 BIDIR. I/F → or ←
CX. PARALLEL I/F → or ←
↓
SELECT-IN HOST

1284 BIDIR. I/F	Bidirectional IEEE 1284 parallel interface.
CX. PARALLEL I/F	Centronics type parallel interface (monodirectional).

Setting the Select-In Signal

1284 BIDIR . I/F
↑
SELECT-IN HOST → or ←
SELECT-IN ON → or ←
↓
DATA BITS 8

SELECT-IN HOST	The printer checks the SELECT-IN signal coming from the host.
SELECT-IN ON	The SELECT-IN signal of the parallel interface is ignored and treated always as ON.

Number of Data Bits

SELECT-IN HOST

↑

DATA BITS 8	→ or ←
DATA BITS 7	→ or ←

↓

INP. BUFFER 2K

Selection of the number of data bits: 7 or 8

Input Buffer Size

DATA BITS 8

↑

INP. BUFFER 256	→ or ←
INP. BUFFER 2K	→ or ←
INP. BUFFER 12K	→ or ←
INP. BUFFER 32K	→ or ←
INP. BUFFER 64K	→ or ←
INP. BUFFER 128K	→ or ←

↓

PARALL. INTERFACE

Selects the input buffer size.

Serial Interface

The following Serial interface functions will display only if the Serial I/F board is installed in the printer.

This setup defines the use of the serial interface and is structured according to the interface specific parameters.

Serial Interface Parameters

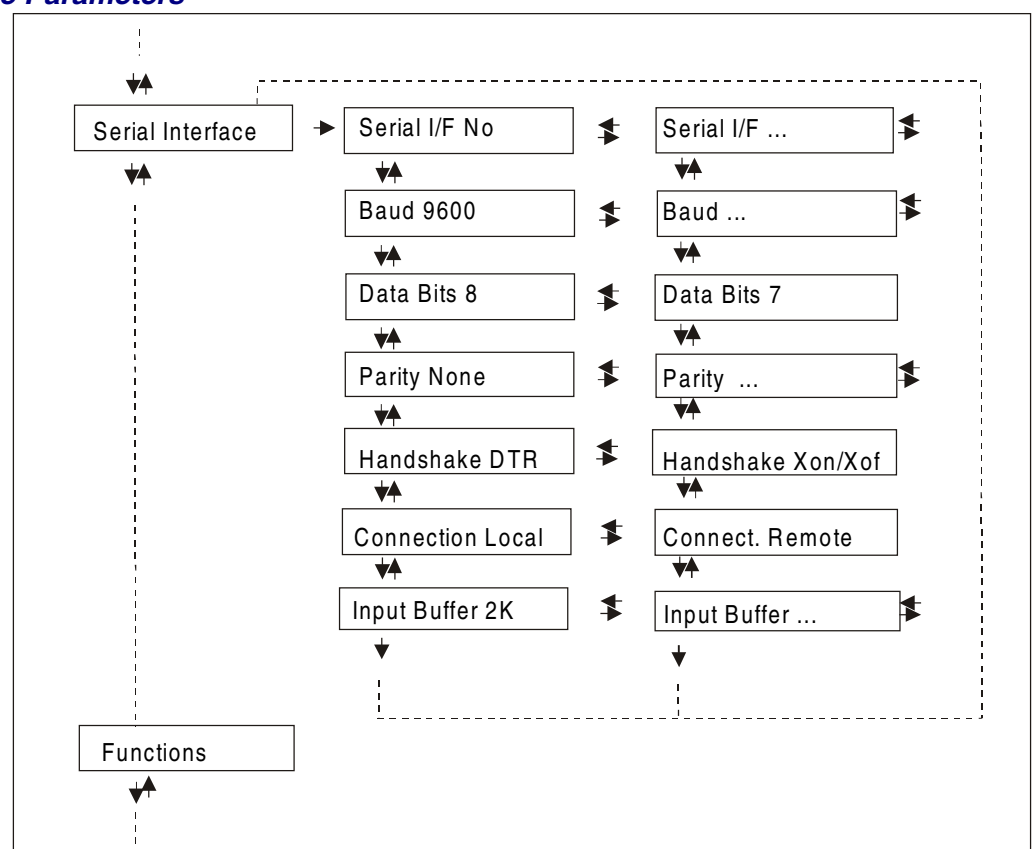

Interface Type

PARALL INTERFACE

↑

SERIAL INTERFACE →

↓

FUNCTIONS

SERIAL INTERFACE

↑

SERIAL I/F NO → or ←

SERIAL I/F 232 → or ←

SERIAL I/F 422 → or ←

↓

BAUD 9600

SERIAL I/F NO	The serial interface is disabled.
SERIAL I/F 232	Defines the usage of the serial interface RS-232/C.
SERIAL I/F 422	Defines the usage of the serial interface RS-422/A.

Baud Rate

SERIAL I/F NO

↑

BAUD 300	→ or ←
BAUD 600	→ or ←
BAUD 1200	→ or ←
BAUD 2400	→ or ←
BAUD 4800	→ or ←
BAUD 9600	→ or ←
BAUD 19200	→ or ←
BAUD 38400	→ or ←

↓

DATA BITS 8

The baud rate is selected in bits per second. The above values can be selected.

Number of Data Bits

BAUD 9600

↑

DATA BITS 8	→ or ←
DATA BITS 7	→ or ←

↓

PARITY NONE

Selection of the number of data bits: 7 or 8.

Parity Check

DATA BITS 8

↑

PARITY NONE	→ or ←
PARITY ODD	→ or ←
PARITY EVEN	→ or ←
PARITY MARK	→ or ←
PARITY SPACE	→ or ←

↓

HANDSHAKE DTR

PARITY NONE	Data does not have a parity bit, i.e. 8 bit data are transferred and the parity check is disabled.
PARITY ODD	Parity check is enabled for odd parity.
PARITY EVEN	Parity check is enabled for even parity.
PARITY MARK	Parity check is disabled and the transmitted parity bit is always a Mark.
PARITY SPACE	Parity check is disabled and the transmitted parity bit is always a Space.

Handshake Protocol

PARITY NONE

↑

HANDSHAKE DTR	→ or ←
HANDSHAKE XONXOF	→ or ←

↓

CONNECTION LOCAL

HANDSHAKE DTR	The Handshake is performed using the DTR Protocol.
HANDSHAKE XONXOF	The Handshake is performed using the XON-XOFF Protocol.

Connection Type

HANDSHAKE DTR

↑

CONNECTION LOCAL	→ or ←
CONNECT. REMOTE	→ or ←

↓

INP. BUFFER 2K

Selects the connection type: local or remote.

Input Buffer Size

CONNECTION LOCAL

↑

INP. BUFFER256	→ or ←
INP. BUFFER 2K	→ or ←
INP. BUFFER12K	→ or ←
INP. BUFFER32K	→ or ←
INP. BUFFER64K	→ or ←
INP. BUFFER128K	→ or ←

↓

SERIAL INTERFACE

Selects the input buffer size.

LAN Interface

The following LAN interface functions will display only if the Ethernet 10/100 Mbit interface board option is installed in the printer.

This setup defines the use of the LAN interface and is structured according to the interface specific parameters.

LAN Interface Parameters

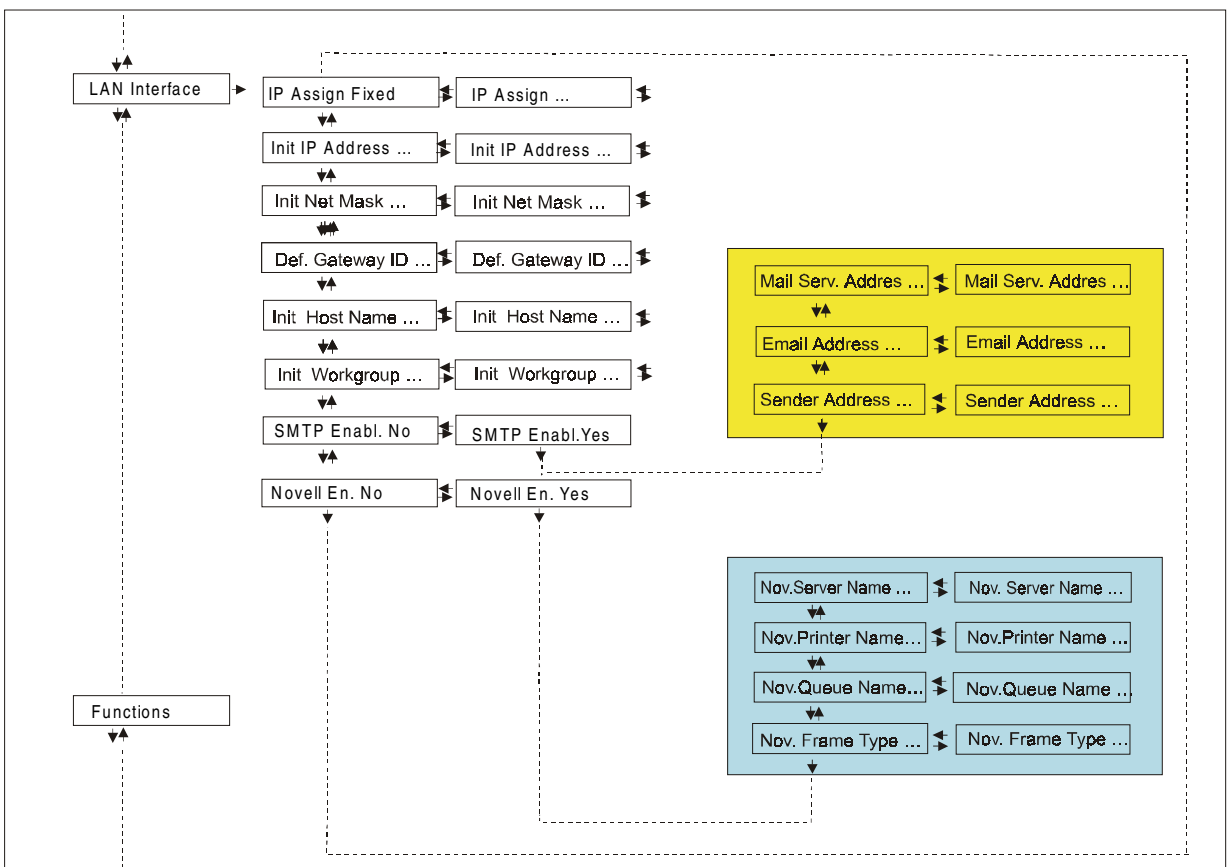

IP Assignment

PARALL INTERFACE

↑

LAN INTERFACE	→

↓

FUNCTIONS

LAN INTERFACE

↑

IP ASSIGN FIXED	→ or ←
IP ASSIGN DHCP	→ or ←
IP ASSIGN ARP	→ or ←

↓

INIT IP ADDRESS 127.000.000.000

IP ASSIGN FIXED	Assigns the static or fixed IP address.
IP ASSIGN DHCP	Assigns the dynamic IP address (DHCP protocol).
IP ASSIGN ARP	Assigns the user' s defined IP address (ARP protocol).

Init IP Address

IP ASSIGN FIXED

INIT IP ADDRESS 000.000.000.000	→ or ←
INIT IP ADDRESS …	→ or ←
INIT IP ADDRESS 255.255.255.255	→ or ←

↓

INIT NET MASK 255.255.254.000

These values set the INIT IP address. The IP address is represented by a decimal notation where the decimal values are divided by points in four fields. Each field ranges between 0 and 255. Use the ← or → keys to increase or decrease the values in one field and the ↓ or ↑ keys to move to the next field (↓ to move to the right and ↑ to move to the left). The default value is **127.000.000.000.**

Init Net Mask

INIT IP ADDRESS 127. 000.000.000

↑

INIT NET MASK 000.000.000.000	→ or ←
INIT NET MASK …	→ or ←
INIT NET MASK 255.255.255.255	→ or ←

↓

DEF. GATEWAY ID 000.000.000.000

These values set the INIT net mask number. This number is represented by a decimal notation where the decimal values are divided by points in four fields. Each field ranges between 0 and 255. Use the ← or → keys to increase or decrease the values in one field and the ↓ or ↑ keys to move to the next field (↓ to move to the right and ↑ to move to the left). The default value is **255.255.254.000.**

ID Default Gateway

INIT NET MASK 255.255.254.000

↑

DEF. GATEWAY ID **000.000.000.000**	→ or ←
DEF. GATEWAY ID …	→ or ←
DEF. GATEWAY ID 255.255.255.255	→ or ←

↓

INIT HOST NAME CPG_xxxxxx

These values set the ID default gateway number. This number is represented by a decimal notation where the decimal values are divided by points in four fields. Each field ranges between 0 and 255. Use the ← or → keys to increase or decrease the values in one field and the ↓ or ↑ keys to move to the next field (↓ to move to the right and ↑ to move to the left).

Init Host Name

DEF. GATEWAY ID 000.000.000.000

↑

INIT HOST NAME .....

→ or ←

PROGRAM key

↓

INIT WORKGROUP CPG_GROUP

The host is identified by a name. This function allows to create the name of the init host using a 15-character string. Use the ← or → keys to increase or decrease the values in one field and the ↓ or ↑ keys to move to the next field (↓ to move to the right and ↑ to move to the left). Press the PROGRAM key to save the selected init host name. The default name is `CPG_xxxxxx`.

Init Workgroup Name

INIT HOST NAME CPG_xxxxxx

↑

INIT WORKGROUP .....

→ or ←

PROGRAM key

↓

SMTP ENABL. NO

The workgroup is identified by a name. This function allows to create the name of the workgroup using a 15-character string. Use the ← or → keys to increase or decrease the values in one field and the ↓ or ↑ keys to move to the next field (↓ to move to the right and ↑ to move to the left). Press the PROGRAM key to save the selected init workgroup name. The default name is `CPG_GROUP`.

Enable/Disable the SMTP Service

INIT WORKGROUP CPG_GROUP

↑

SMTP ENABL. NO	→ or ←	SMTP ENABL. YES
↓		↓
NOVELL EN. NO		MAIL SERV.ADDRES 000.000.000.000

SMTP ENABL. NO	Disables the SMTP (Simple Mail Transfer Protocol) service, that is disables the reception/transfer/error service of the e-mail.
SMTP ENABL. YES	Enables the SMTP (Simple Mail Transfer Protocol) service, that is enables the reception/transfer/error service of the e-mail.

Mail Server Address

This item is displayed only if the `SMTP ENABL.` function is selected in `YES`.

SMTP ENABL. YES

↑

MAIL SERV.ADDRES **000.000.000.000**	→ or ←
MAIL SERV.ADDRES …	→ or ←
MAIL SERV.ADDRES 255.255.255.255	→ or ←

↓

EMAIL ADDRESS 000.000.000.000

These values set the mail server address. This number is represented by a decimal notation where the decimal values are divided by points in four fields. Each field ranges between 0 and 255. Use the ← or → keys to increase or decrease the values in one field and the ↓ or ↑ keys to move to the next field (↓ to move to the right and ↑ to move to the left).

E-mail Address

This item is displayed only if the SMTP ENABL. function is selected YES.

MAIL SERV.ADDRES 000.000.000.000

↑

EMAIL ADDRESS xxxxxxxxxxx	→ or ←

↓

SENDER ADDRESS xxxxxxxxxxx

This function allows to write the e-mail address where you can notify the failures. Use the ← or → keys to increase or decrease the values in one field and the ↓ or ↑ keys to move to the next field (↓ to move to the right and ↑ to move to the left). Press the PROGRAM key to save the e-mail address.

Sender Address

This item is displayed only if the SMTP ENABL. function is selected YES.

EMAIL ADDRESS xxxxxxxxxxx

↑

SENDER ADDRESS xxxxxxxxxxx	→ or ←

↓

SMTP ENABL. YES

This function identifies the address of the sender's e-mail using a string of characters. Use the ← or → keys to increase or decrease the values in one field and the ↓ or ↑ keys to move to the next field (↓ to move to the right and ↑ to move to the left). Press the PROGRAM key to save the sender's e-mail address.

Enable/Disable the Novell Service

SMTP ENABL. NO

↑

NOVELL EN. NO	→ or ←	NOVELL EN. YES
↓		↓
IP ASSIGN FIXED		NOV. SERVER NAME xxxxxxxxxxx

NOVELL EN. NO	Disables the service to see the printer via NOVELL network.
NOVELL EN. YES	Enables the service to see the printer via NOVELL network.

Print Server Name in Novell Network

This item is displayed only if the `NOVELL EN.` function is selected `YES`.

NOVELL EN. YES

↑

NOV. SERVER NAME …….. → o ←

↓

NOV. PRINTER NAME xxxxxxxxxxx

This function allows to create the print server name in Novell network. Use the ← or → keys to increase or decrease the values in one field and the ↓ or ↑ keys to move to the next field (↓ to move to the right and ↑ to move to the left). Press the PROGRAM key to save the print server name. The default print server name is `NW_COMPUPRINT`.

Printer Name in Novell Network

This item is displayed only if the `NOVELL EN.` function is selected `YES`.

NOV. SERVER NAME xxxxxxxxxxx

↑

NOV. PRINTER NAME	→ or ←

↓

NOV. QUEUE NAME xxxxxxxxxxx

This function allows to create the printer name in Novell network. Use the ← or → keys to increase or decrease the values in one field and the ↓ or ↑ keys to move to the next field (↓ to move to the right and ↑ to move to the left). Press the PROGRAM key to save the printer name. The default printer name is `PS1`.

Queue Name in Novell Network

This item is displayed only if the `NOVELL EN.` function is selected `YES`.

NOV. PRINTER NAME xxxxxxxxxxx

↑

NOV. QUEUE NAME	→ or ←

↓

NOV.FRAME TYPE xxxxxxxxxxx

This function allows to create the print queue name in Novell network. Use the ← or → keys to increase or decrease the values in one field and the ↓ or ↑ keys to move to the next field (↓ to move to the right and ↑ to move to the left). Press the PROGRAM key to save the print queue name. The default printer name is `Q1`.

Frame Type in Novell Network

This item is displayed only if the `NOVELL EN.` function is selected `YES`.

NOV. QUEUE NAME xxxxxxxxxxx

↑

NOV.FRAME TYPE 0	→ or ←
NOV. FRAME TYPE …	→ or ←
NOV. FRAME TYPE 30	→ or ←

↓

NOVELL EN YES

These values select the frame type number in Novell network. This number ranges between 0 and 30. The default frame type number is `0`.

Functions

This item groups various printer functions, with which you can configure the printer.

Functions Group Parameters

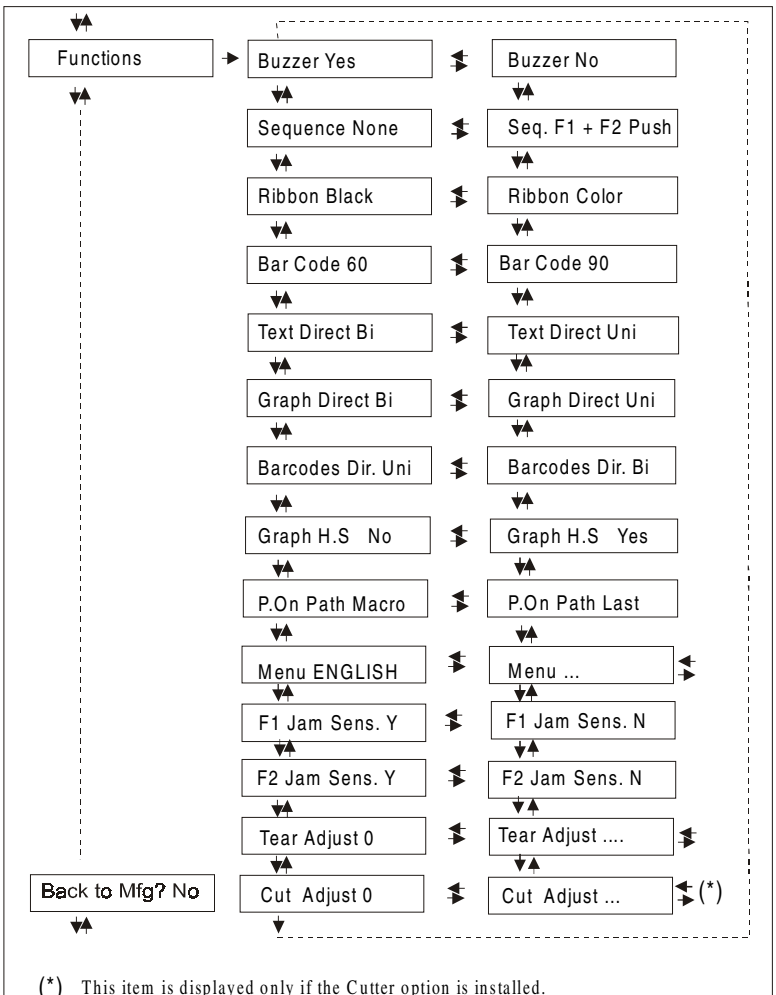

Enable/Disable the Buzzer

SERIAL INTERFACE

or

LAN INTERFACE

↑

FUNCTIONS → **BUZZER YES** → or ←

BUZZER NO → or ←

↓

BACK TO MFG: NO

FUNCTIONS

↑

↓

SEQUENCE NONE

Enable or disables the buzzer.

Paper Loading Sequence

BUZZER YES

↑

SEQUENCE NONE → or ←

SEQ. F1+F2 PUSH → or ←

↓

RIBBON BLACK

The `SEQ. F1+F2 PUSH` item is displayed only if the Front2 push tractor option is installed.

SEQUENCE NONE	The paper is fed only through the path selected by operator panel.
SEQ. F1+F2 PUSH	The paper is fed firstly with the Front1 push tractor and successively through the Front2 push tractor.

Ribbon Type Selection

SEQUENCE NONE

↑

RIBBON BLACK	→ or ←
RIBBON COLOR	→ or ←

↓

BAR CODE 60DPI

Selects the ribbon type to be used with the printer: black or color.

Bar Code Density

RIBBON BLACK

↑

BAR CODE 60DPI	→ or ←
BAR CODE 90DPI	→ or ←

↓

TEXT DIRECT BI

Selects the bar code print density: 60 or 90 dpi.

Text Print Direction

BAR CODE 60DPI

↑

TEXT DIRECT BI	→ or ←
TEXT DIRECT UNI	→ or ←

↓

GRAPH DIRECT BI

Selects the print direction for text: bidirectional or unidirectional.

Graphics Print Direction

TEXT DIRECT BI

↑

GRAPH DIRECT BI	→ or ←
GRAPH DIRECT UNI	→ or ←

↓

BARCODES DIR.UNI

Selects the print direction for graphics: bidirectional or unidirectional.

Bar Codes Print Direction

GRAPH DIRECT BI

↑

BARCODES DIR. BI	→ or ←
BARCODES DIR. UNI	→ or ←

↓

GRAPH H.S. YES

Selects the print direction for bar codes: bidirectional or unidireccional.

Graphics Printing Speed Selection

BARCODES DIR. UNI

↑

GRAPH H.S. NO	→ or ←
GRAPH H.S. YES	→ or ←

↓

P. ON PATH MACRO

GRAPH H.S NO	Selects graphics printing (bit image data) at normal speed mode.
GRAPH H.S YES	Selects graphics printing (bit image data) at high speed mode.

Paper Path at Power-On

GRAPH H.S. YES

↑

P. ON PATH MACRO	→ or ←
P. ON PATH LAST	→ or ←

↓

MENU ENGLISH

P. ON PATH MACRO	The paper path at power-on is the one from the default Macro.
P. ON PATH LAST	The paper path at power-on is the last one that was selected before the printer was powered off.

Selection of the Language of the Display Messages

P. ON PATH MACRO

↑

MENU ENGLISH	→ or ←
MENU ITALIANO	→ or ←
MENU FRANCAIS	→ or ←
MENU ESPANOL	→ or ←
MENUE DEUTSCH	→ or ←

↓

F1 JAM SENS. Y

These items are self explaining.

See also "Selecting the Display Language" before in this manual.

Enable/Disable Front1 Tractor Jam Sensor

MENU ENGLISH

↑

F1 JAM SENS. Y	→ or ←
F1 JAM SENS. N	→ or ←

↓

F2 JAM SENS. Y

or

TEAR ADJUST:xxx

F1 JAM SENS. Y	Enables the paper jam sensor located in the lower Front1 push tractor.
F1 JAM SENS. N	Disables the paper jam sensor located in the lower Front1 push tractor.

When the cutter option is used, the jam sensor should be enabled for higher cut precision.

Enable/Disable Front2 Tractor Jam Sensor

This item is displayed only if the Front2 push tractor option is installed.

F1 JAM SENS. Y

↑

F2 JAM SENS. Y	→ or ←
F2 JAM SENS. N	→ or ←

↓

TEAR ADJUST:xxx

F2 JAM SENS. Y	Enables the paper jam sensor located in the upper Front2 push tractor.
F2 JAM SENS. N	Disables the paper jam sensor located in the upper Front2 push tractor.

When the cutter option is used, the jam sensor should be enabled for higher cut precision.

Adjusting the Tear-Off Position

F2 JAM SENS. Y (if the Front2 push tractor option is installed)

or

F1 JAM SENS. Y

↑

TEAR ADJUST: - 30	→ or ←
TEAR ADJUST: ...	→ or ←
TEAR ADJUST: +360	→ or ←

↓

CUT ADJUST (if the cutter option is installed)

or

BUZZER YES

TEAR ADJUST: xxxx

These values adjust the distance between the Tear-Off Perforation and the Tear-Off Bar. The values correspond to 1/180 inch units, i.e. the tuning ranges between -1/6 and 2 inch. **0** is the default value.

See also "How to Use the Tear-Off Function", later in this Chapter.

Adjusting the Cut Position

This item is displayed only if Cutter option is installed.

TEAR ADJUST: xxx

↑

CUT ADJUST: - 30	→ or ←
CUT ADJUST: ...	→ or ←
CUT ADJUST: +360	→ or ←

↓

BUZZER YES

CUT ADJUST: xxxx

These values adjust the position in which the paper is cut. The values correspond to 1/180 inch units, i.e. the tuning ranges between -1/6 and 2 inch. **0** is the default value.

Resetting to Factory Default Values

With the `BACK TO MFG` function it is possible to reset all items in the *Power On Configuration Setup* and in the *Program Setup* to their factory default values. This may be useful if you do not remember the values you set in the setups, or because you simply changed you mind about the settings you have just done. The default values for the setup items are indicated in bold.

FUNCTIONS

↑

BACK TO MFG: NO → or ← BACK TO MFG: YES

↓ or PROG

PRINT OUT ?

If you want to select `BACK TO MFG:YES`, you have to exit from this item using the ↑ or the ↓ key, in order to confirm the selection of this value.

At this point, the *Power On Configuration Setup* procedure is finished. If you exit pressing the ↓ and the PROGRAM key, the new settings will be saved.

Do not power off the printer before all data have been written into the NVM and the printer has returned online.

Program Setup

The default values of the various functions are indicated in bold.

Entering the Program Setup

Press the PROGRAM key when the printer is turned on and is offline or online without printing. The following message will be displayed:

```
PRINT OUT? NO
```

The figure in the following page shows the structure and how to move inside the Program Setup.

Main Structure

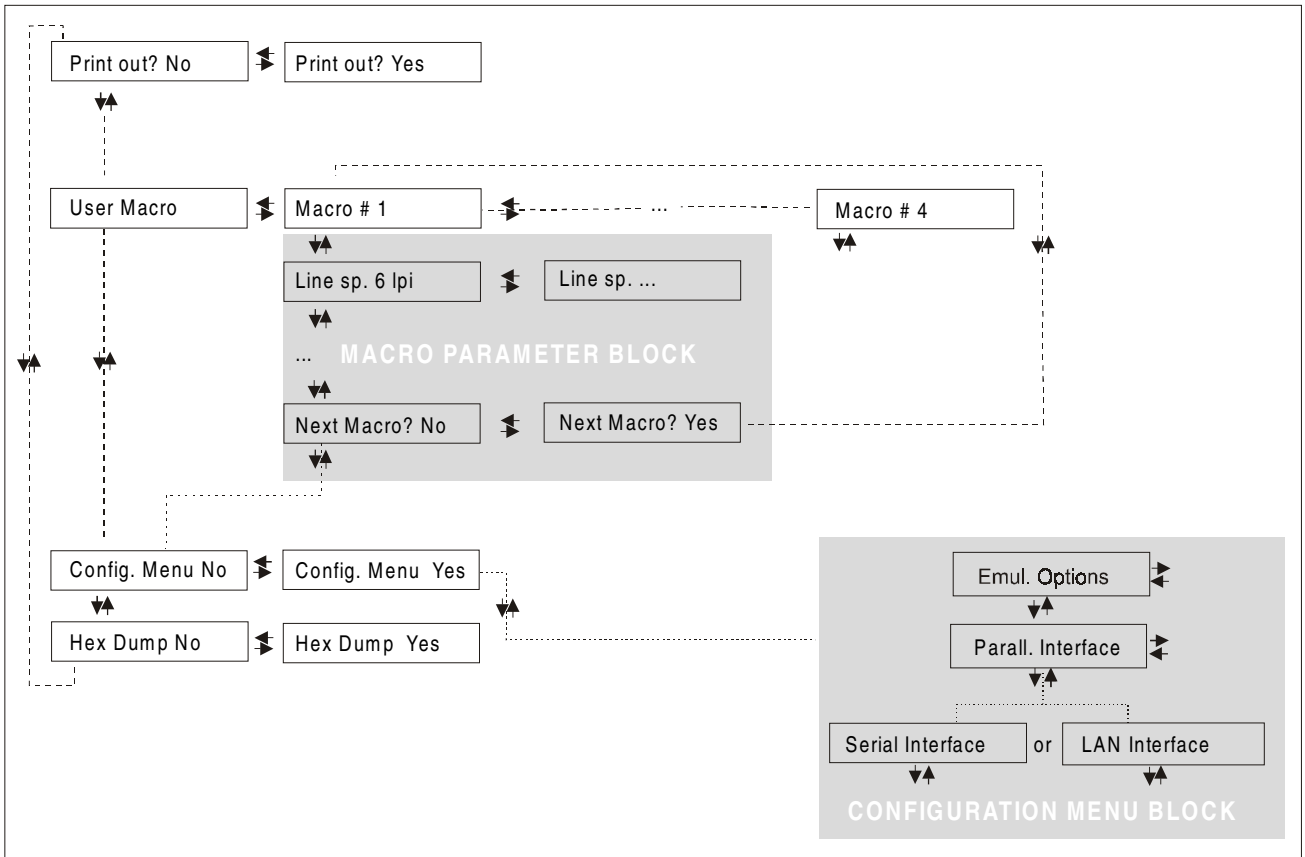

The items define the following parameters:

- Four user macros
- The direct access to the Power-On Configuration
- Hexadecimal printout

PRINT OUT? NO → or ← PRINT OUT? YES

↓

USER MACRO

PRINT OUT? NO	The setup is not printed.
PRINT OUT? YES	The printer setup is printed. The printout starts as soon as you select this value.

NOTE: The Program setup printout indicates:

- the currently selected values,
- the current selected macro is marked with the #x# symbols (`USER MACRO #x#`),
- the current firmware release.

User Macro

The USER MACRO item allows to prepare four printing environments (MACRO#1, MACRO#2, MACRO#3 and MACRO#4). Each macro is composed of a group of parameters which define a configuration that can then be recalled to easily set the printer for four printing environments.

Selection of the User Macro

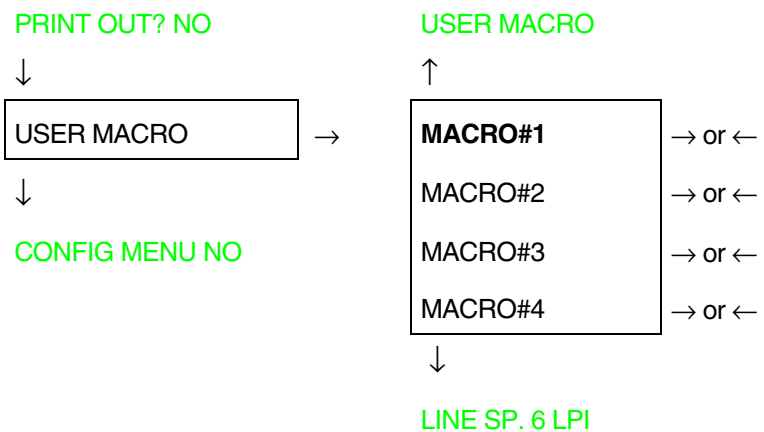

Selection of the macro for which you intend to set the parameters.

When a new macro is selected and the fanfold paper is present in the paper path set in the previous macro, it will be automatically parked (TEAR IF NECESS/PARK PAPER is displayed). Tear off this fanfold paper and press PARK key.

User Macro Parameters

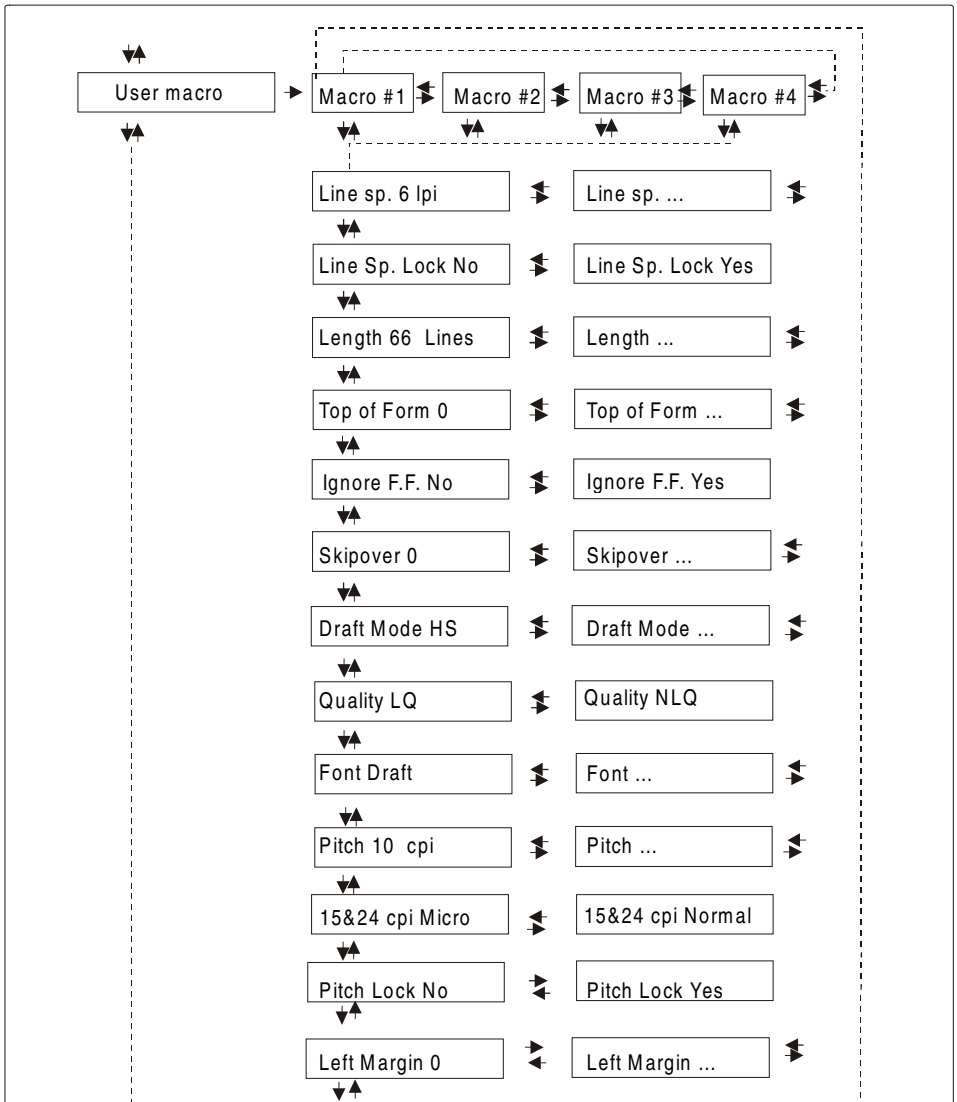

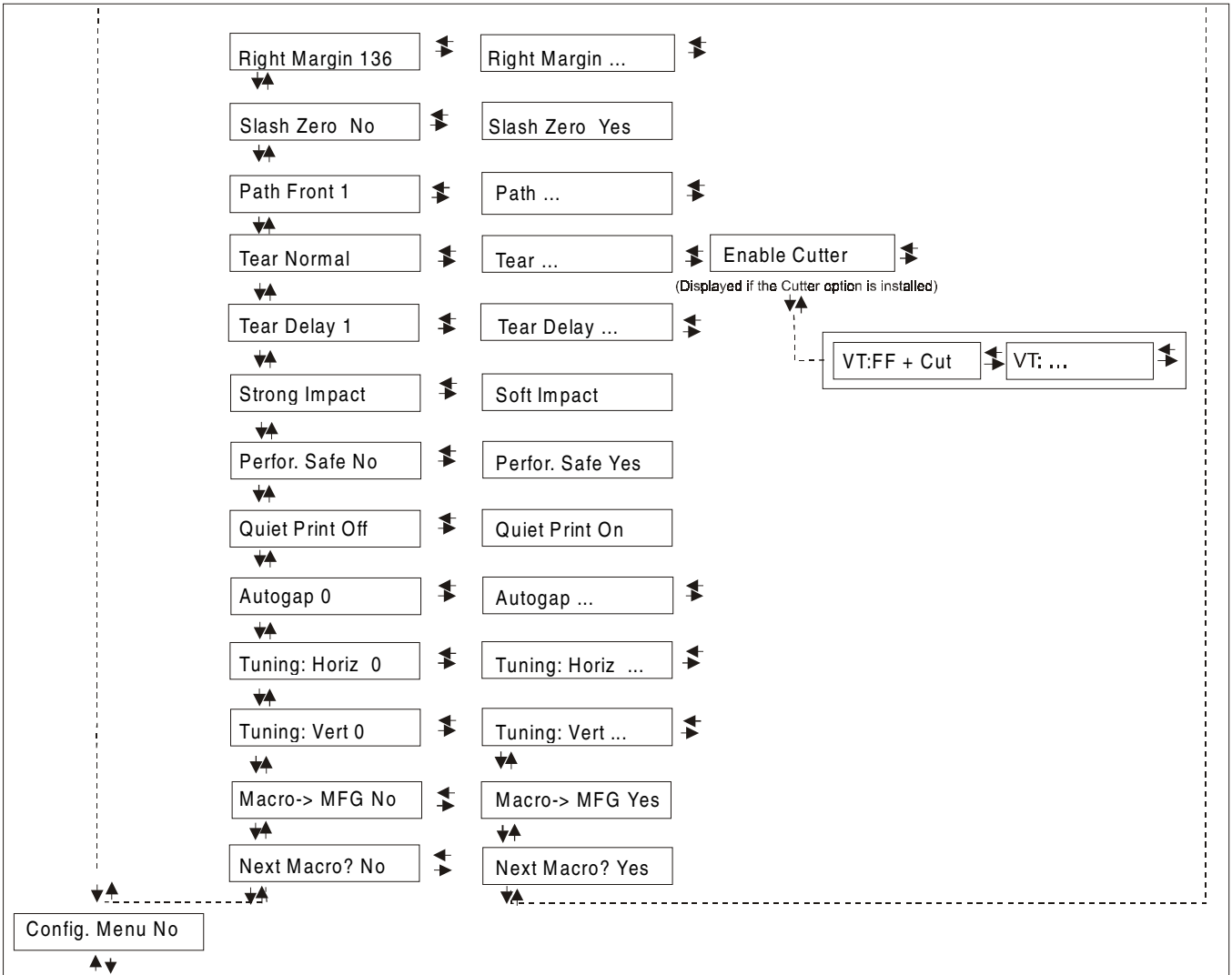
Right Margin 136
Right Margin ...
Slash Zero No
Slash Zero Yes
Path Front 1
Path ...
Tear Normal
Tear ...
Enable Cutter
(Displayed if the Cutter option is installed)
Tear Delay 1
Tear Delay ...
VT:FF + Cut
VT: ...
Strong Impact
Soft Impact
Perfor. Safe No
Perfor. Safe Yes
Quiet Print Off
Quiet Print On
Autogap 0
Autogap ...
Tuning: Horiz 0
Tuning: Horiz ...
Tuning: Vert 0
Tuning: Vert ...
Macro-> MFG No
Macro-> MFG Yes
Next Macro? No
Next Macro? Yes
Config. Menu No

Line Spacing

MACRO#1

↑

MACRO#1	→	**LINE SP. 6 LPI**	→ or ←
		LINE SP. 8 LPI	→ or ←
		LINE SP. 12 LPI	→ or ←
		LINE SP. 3L/30MM	→ or ←
		LINE SP. 4L/30MM	→ or ←
		LINE SP. 6L/30MM	→ or ←
		LINE SP. 8L/30MM	→ or ←
		LINE SP.12L/30MM	→ or ←

↓

LINE SP. LOCK NO

These values define the line spacing in lines/inch (6, 8, 12) or in lines per 30 mm (3, 4, 6, 8, 12).

Line Spacing Lock

LINE SP. 6 LPI

↑

LINE SP. LOCK NO	→ or ←
LINE SP. LOCK YES	→ or ←

↓

LENGTH xxx

LINE SP. LOCK NO	Setting this item, the value set for vertical spacing can be changed by software or operator panel
LINE SP. LOCK YES	Setting this item, the value set for vertical spacing cannot be changed by software but only by operator panel.

Page Length

LINE SP. LOCK NO

↑

LENGTH 1 LINE	→ or ←
LENGTH ... LINES	→ or ←
LENGTH 244 LINES	→ or ←

↓

TOP OF FORM 0

These items set the page length for fanfold paper in number of lines depending on the current vertical spacing. Default value is **66 lines**.

Top of Form

LENGTH xx

↑

TOP OF FORM 0	→ or ←
TOP OF FORM …	→ or ←
TOP OF FORM xxx	→ or ←

↓

IGNORE F.F. NO

These items set the top of form. The values range between 0 and the page length - 1.

Form Feed (FF) Command

TOP OF FORM 0

↑

IGNORE F.F. NO	→ or ←
IGNORE F.F. YES	→ or ←

↓

SKIPOVER 0

IGNORE F.F. NO	The Form Feed (FF) command is always executed.
IGNORE F.F. YES	The Form Feed (FF) command is ignored when the paper is in the top of form (TOF) position. A Form Feed can be performed if the LOAD/FF key is pressed.

Skip Over Perforation

IGNORE F.F. NO

↑

SKIPOVER 0	→ or ←
SKIPOVER …	→ or ←
SKIPOVER xxx	→ or ←

↓

DRAFT MODE HS

These items set the skipover perforation. The values range between 0 and the page length - 1.

Draft Print Mode Selection

SKIPOVER 0

↑

DRAFT MODE HS	→ or ←
DRAFT MODE NORM	→ or ←
DRAFT MODE BEST	→ or ←

↓

QUALITY LQ

DRAFT MODE HS	The printer performs the draft printing at high speed.
DRAFT MODE NORM	The printer performs the draft printing at normal speed.
DRAFT MODE BEST	The printer performs the draft printing at low speed to obtain better quality printing.

Quality Print Mode Selection

DRAFT MODE HS

↑

QUALITY LQ	→ or ←
QUALITY NLQ	→ or ←

↓

FONT Draft

QUALITY LQ	The printer performs the Letter Quality printing.
QUALITY NLQ	The printer performs the Near Letter Quality printing.

Font Selection

QUALITY LQ

↑

FONT Draft	→ or ←
FONT Courier	→ or ←
FONT OCR-B	→ or ←
FONT Gothic	→ or ←
FONT Prestige	→ or ←
FONT Present	→ or ←
FONT OCR-A	→ or ←
FONT Script	→ or ←

↓

PITCH 10 CPI

Selects the fonts. OCR-A is displayed only if a non proportional pitch has been selected.

Pitch Selection

FONT Draft

↑

PITCH 5 CPI	→ or ←
PITCH 6 CPI	→ or ←
PITCH 7.5 CPI	→ or ←
PITCH 8.5 CPI	→ or ←
PITCH 10 CPI	→ or ←
PITCH 12 CPI	→ or ←
PITCH 15 CPI	→ or ←
PITCH 17.1 CPI	→ or ←
PITCH 20 CPI	→ or ←
PITCH 24 CPI	→ or ←
PITCH PROP	→ or ←

↓

15&24CPI MICRO

These items set the horizontal spacing in characters per inch. The `PITCH PROP` item sets proportional character spacing.

Micro Dot Print Mode

PITCH 10 CPI

↑

15&24CPI MICRO	→ or ←
15&24CPI NORMAL	→ or ←

↓

PITCH LOCK NO

15&24CPI MICRO	The print matrix uses 8 x 8 dots only if the horizontal spacing is 15 or 24 cpi. (micro mode).
15&24CPI NORMAL	The print matrix uses 12 x12 dots (normal mode).

Pitch Lock

15&24CPI MICRO

↑

PITCH LOCK NO	→ or ←
PITCH LOCK YES	→ or ←

↓

LEFT MARGIN 0

PITCH LOCK NO	Setting this item, the pitch can be changed by software or operator panel.
PITCH LOCK YES	Setting this item, the pitch can be changed ONLY by operator panel.

Left Margin

PITCH LOCK NO

↑

LEFT MARGIN 0	→ or ←
LEFT MARGIN ...	→ or ←
LEFT MARGIN xxx	→ or ←

↓

RIGHT MARGIN 136

The Left Margin is set in number of columns (depending on the current pitch) starting from the physical left edge.

Right Margin

LEFT MARGIN 0

↑

RIGHT MARGIN. 2	→ or ←
RIGHT MARGIN. ...	→ or ←
RIGHT MARGIN. xxx	→ or ←

↓

SLASH ZERO NO

The Right Margin is set in number of columns (depending on the current pitch) starting from the physical left edge. The default value is **136**.

Zero Character Printing

RIGHT MARGIN 136

↑

SLASH ZERO NO	→ or ←
SLASH ZERO YES	→ or ←

↓

PATH FRONT 1

You can select the Zero character printing with or without a slash.

Paper Path Selection

This function defines the default paper path for the current macro.

SLASH ZERO NO

↑

PATH FRONT 1	→ or ←
PATH FRONT 2	→ or ←
PATH PUSH PULL	→ or ←

↓

TEAR NORMAL

PATH FRONT 1	Paper loading with the Front1 push tractor (low position).
PATH FRONT 2	Paper loading with the Front2 push tractor (up position).This item is displayed only if the Front2 push tractor option is installed.
PATH PUSH PULL	Paper loading with the Front1 push tractor and the rear pull tractor. This item is displayed if the rear pull tractor option is also installed.

Tear-Off Mode

PATH FRONT 1

↑

TEAR NORMAL	→ or ←
TEAR AUTOMATIC	→ or ←
LABEL	→ or ←
TEAR NO	→ or ←
ENABLE CUTTER	→ or ←

↓

TEAR DELAY 1

TEAR NORMAL	The Tear-Off Function is performed pressing the TEAR key when the printer is offline.
TEAR AUTOMATIC	When the printer is not receiving any data, the paper is moved to the Tear-Off position. It is returned to the Tear-Off position as soon as it receives printing data.
LABELS	This item must be set when printing on labels, in order to avoid paper jams. The paper does not execute any backward movement. When pressing the PARK key, the paper is ejected.
TEAR NO	The paper does not executes any backward movement.
ENABLE CUTTER	This selection enables the cutter option and appears only if the cutter option is installed.

See also How to Use the Tear-Off Function and How to Handle the Paper Parking later in this chapter.

Cutter Mode

This item is displayed only if the `ENABLE CUTTER` function is selected.

ENABLE CUTTER

↑

VT:FF + CUT	→ or ←
VT:LF + CUT	→ or ←
VT:VT	→ or ←
CUT EACH PAGE	→ or ←
CUT PAPER CHANGE	→ or ←

↓

ENABLE CUTTER

VT:FF + CUT	When the printer receives a VT command, it performs a form feed and then cuts the paper.
VT:LF + CUT	When the printer receives a VT command, it performs a line feed and then cuts the paper.
VT:VT	When the printer receives a VT command, it performs a vertical tabulation.
CUT EACH PAGE	Selecting this item, the printer cuts the paper at the end of each page according to the selected page length.
CUT PAPER CHANGE	Selecting this item, the printer cuts the paper when it receives a paper path change command and passes over to the new paper path.

Tear Delay Mode

TEAR NORMAL

↑

TEAR DELAY 1	→ or ←
TEAR DELAY …	→ or ←
TEAR DELAY 5	→ or ←

↓

STRONG IMPACT

This item defines the time that printer uses to move paper to the Tear-Off position in automatic tear mode. The range of the tear delay is between 1 and 5 seconds. The default value is **1** sec.

Print Impact Strength

TEAR DELAY 1

↑

STRONG IMPACT	→ or ←
SOFT IMPACT	→ or ←

↓

PERFOR. SAFE NO

STRONG IMPACT	The impact strength of the print head is set for printing on multicopy paper.
SOFT IMPACT	The impact strength of the print head is set for printing few copies. The printing noise is reduced.

Paper Perforation

This function allows to move the print head aside the paper when the fanfold paper perforation passes between the mylar and the print bar, to facilitate paper movement on critical forms.

STRONG IMPACT

↑

PERFOR. SAFE NO	→ or ←
PERFOR. SAFE YES	→ or ←

↓

QUIET PRINT OFF

PERFOR. SAFE NO	The function is disabled. The print head remains in its position, when the perforation of the paper passes.
PERFOR. SAFE YES	The function is enabled. The print head is moved aside, when the perforation passes.

Quiet Printing

PERFOR. SAFE NO

↑

QUIET PRINT OFF	→ or ←
QUIET PRINT ON	→ or ←

↓

AUTOGAP 0

QUIET PRINT OFF	The function is disabled. Printing at normal noise level.
QUIET PRINT ON	The function is enabled. Printing at reduced noise level.

Adjusting the Distance of the Print Head

QUIET PRINT OFF

↑

AUTOGAP -5	→ or ←
AUTOGAP ...	→ or ←
AUTOGAP +3	→ or ←
MANUAL GAP	→ or ←
FIXED GAP 0.3	→ or ←
FIXED GAP ...	→ or ←
FIXED GAP 9.3	→ or ←

↓

TUNING:.HORIZ 0

AUTOGAP xxx	Selecting one of these values sensing the paper thickness. Negative values reduce the distance between the print head and the paper. Default value is `AUTOGAP 0`.
MANUAL GAP	Selecting this item, the print head must be adjusted manually.
FIXED GAP xxx	Selecting one of these values the printer adjusts the print head gap to a fixed distance.

Horizontal Character Tuning

AUTOGAP 0

↑

TUNING:HORIZ 0	→ or ←
TUNING:HORIZ ...	→ or ←
TUNING:HORIZ 60	→ or ←

↓

TUNING: VERT 0

These values adjust the distance between the left paper margin and the first print character. The values correspond to 1/120 inch units, i.e. the tuning ranges between 0 and 0,5 inch.

Vertical Character Tuning

TUNING:HORIZ 0

↑

TUNING:VERT. -30	→ or ←
TUNING:VERT. ...	→ or ←
TUNING:VERT. 360	→ or ←

↓

MACRO -> MFG NO

These values adjust the distance between the top paper margin and the first printable line. The values correspond to 1/180 inch units, i.e. the tuning ranges between -1/6 and 2 inch. **0** is the default value.

Resetting the Macro Parameters to the Factory Defaults

TUNING:VERT. 0

↑

MACRO -> MFG NO	→ or ←
MACRO -> MFG YES	→ or ←

↓

NEXT MACRO? NO

MACRO -> MFG NO	The new values set for the macro parameters will be the used.
MACRO -> MFG YES	The values set for the macro parameters will be reset to their factory defaults.

Selecting Another Macro

MACRO -> MFG NO

↑

NEXT MACRO? NO → or ← NEXT MACRO? YES

↓ ↓

CONFIG MENU NO MACRO#1

To pass over to another macro, select `NEXT MACRO YES`. Pressing the ↓ or ↑ key the item `MACRO#1` is displayed, then press the → key to pass over to `MACRO#2` (`MACRO CHANGING` is displayed).

When passing over from one macro to another, the fanfold paper loaded from the paper path, selected in the previous macro, will be automatically parked (`TEAR IF NECESS/PARK PAPER` is displayed). Tear off this fanfold paper and press PARK key.

You can now set the parameters for `MACRO#2` as described above. In this way you prepare the second printing environment. Passing over from one macro to the other then sets two different printing environments.

Passing over to the Power-On Configuration

At this point of the setup, it is possible to pass over to the *Power On Configuration* functions setting.

NEXT MACRO NO
↑
CONFIG MENU NO → or ← CONFIG MENU YES
↓ ↓
HEX DUMP NO EMUL. OPTIONS

These items are self-explaining.

Hexadecimal Dump

CONFIG MENU NO
↑
HEX DUMP NO → or ← HEX DUMP YES
↓
STORE? QUIT

If you select `HEX DUMP YES`, press the PROGRAM key to set this item. The hexadecimal printing continues, until the `HEX DUMP NO` item is selected, entering again into the *Program Setup*.

Storing the values

HEX DUMP NO

↑

STORE? QUIT	→ or ←
STORE? SAVE	→ or ←
STORE? CURRENT	→ or ←

PROG

EXIT

STORE? QUIT	This setting does not save any of the new values set. The values set previously will be used.
STORE? SAVE	The values set are stored permanently (in the NVM) and will be used until they are changed by the operator.
STORE? CURRENT	The values set are valid until the printer is turned off. When you turn the printer on again, the values set in the preceding setup setup will be used.

At this point the Program Configuration Setup is finished. You exit pressing the PROGRAM key.

How to Select the Paper Path

The paper can be loaded into the printer using different paper paths. The messages indicating the paper paths are shown only if the corresponding loading device is installed on the printer.

Proceed as follows:

1. Press the ON LINE key to put the printer offline (ON LINE indicator unlit).
2. Press the PATH key, according to the installed devices the following messages are displayed:

LOAD FRONT 1	For the paper path using the Front1 push tractor.
LOAD FRONT 2	For the paper path using the Front2 push tractor option.
LOAD PUSH-PULL	For the paper path using the Front1 push tractor and the rear pull tractor option.

- To load fanfold paper go to "Loading Paper Using the Front1 Push Tractor", "Loading Paper Using the Front2 Push Tractor (option)", Loading Paper Using the Front1 Push Tractor and the Rear Pull Tractor (option)". When a new paper path is selected, the paper loaded in the printer is automatically parked.

How to Use the Tear-Off Function

This function is used to match the paper perforation with the tear-off bar. For this function the following values must be set:

Selection of the Paper Size

1. Press the PROGRAM key when the printer is disabled or enabled without printing to enter the *Program Setup*.

2. Press the ↓ key and the following message appears:

```
USER MACRO
```

3. Press the → key to select the macro for which you want to set the paper size (`MACRO#1`, `MACRO#2`, `MACRO#3` or `MACRO#4`).

4. Once the desired macro is displayed press the ↓ key until the following parameter is displayed:

```
LENGTH xx
```

5. Press the → or ← key until the desired page size is displayed.

6. Press again the PROGRAM key to exit the setup end set the new value.

Adjusting the Tear-Off Position

To check the Tear-Off Position proceed as follows:

1. Check if the paper perforation matches the tear-off bar on the printer.
2. To move manually the paper to the Tear-Off position, press the TEAR key when the printer is enabled without printing (`TEAR NORMAL` function selected `YES` in the *Program Setup*).

You can leave the manual tear off function by pressing again the TEAR key.

If it does not:

1. Turn the printer off and press the PROGRAM key and hold it pressed while powering on the printer until the `RELEASE KEY` message is displayed to enter the *Power-On Configuration*.
2. Press the ↓ key until the following message appears:

```
FUNCTIONS
```

3. Press the → key to enter and then press the ↓ until the following message is displayed:

```
TEAR ADJUST xxx
```

4. Press the → or ← key to scroll the values of this function.

The values below 0 move the tear-off position downwards, values above 0 move the paper upwards. The values can be set between -30 and 360 at 1/180 inches (-1/6 to 2 inches).

5. When the desired value is displayed, press the PROGRAM key.
6. Press the PROGRAM key to save and exit from the setup.

Selection of the Tear-Off Mode

It is now possible to select the Tear-Off Mode.

1. Press the PROGRAM key when the printer is disabled or enabled without printing to enter the *Program Setup*.
2. Press the ↓ key. The following message is displayed:

```
USER MACRO
```

3. Press the → key to select the macro for which you want to set the tear-off mode `MACRO#1`, `MACRO#2`, `MACRO#3` or `MACRO#4`).
4. Press the ↓ key, until the following message is displayed:

```
TEAR NORMAL
```

Pressing the → or ← key it is now possible to decide how to execute the tear off function:

TEAR NORMAL	Pressing the TEAR key the paper is moved to the tear-off position. Pressing again the TEAR key to exit from the tear-off mode, the paper is moved to the printing position.
TEAR AUTOMATIC	If the printer is not receiving data, the paper is moved automatically to the tear position.
LABEL	The TEAR key is disabled for the tear-off function. This selection is useful when printing on labels. Pressing the PARK key, the printer ejects the paper toward the back of the printer.
TEAR NO	The tear-off function is disabled.

5. Press the PROGRAM key to exit the setup.

How to Lock/Unlock the Printer Setups

To prevent not expertise persons changing the printer setup parameters, it is possible to lock/unlock the access to the printer setups as follows:

- Press ON LINE, MACRO and ALTERNATE keys at the same time and keep them pressed while powering the printer on. As soon as these keys are released, the following messages will be displayed:

```
9090
```

then,

```
LOCKED MENU
```

Now the access to the printer setups is locked. If the PROGRAM key is pressed, the `LOCKED MENU` message is displayed (the PROGRAM key is disabled).

- If you decide to unlock the printer setup, turn the printer off, then press the ON LINE, MACRO and ALTERNATE keys at the same time and keep them pressed while powering the printer on again. As soon as these keys are released, the following messages will be displayed:

```
9090
```

then,

```
UNLOCKED MENU
```

How to Handle the Paper Parking

According to the setting of the TEAR item in the *Program Setup*, the paper parking procedure is performed in different ways. See the following description:

If TEAR NO is selected:

- When the paper is positioned at the first printable line and the paper path is changed (changing the Macro or pressing the PATH key) or the PARK key is pressed, the printer performs automatically the parking procedure.

- If at least one line has been printed, or the paper has been fed forward at least 1 line and the paper path is changed (changing the Macro or pressing the PATH key) or the PARK key is pressed, the display shows TEAR IF NECESS./PARK PAPER.
  If the paper to be parked is longer than 18" tear it off and press the PARK key again to perform the parking procedure.

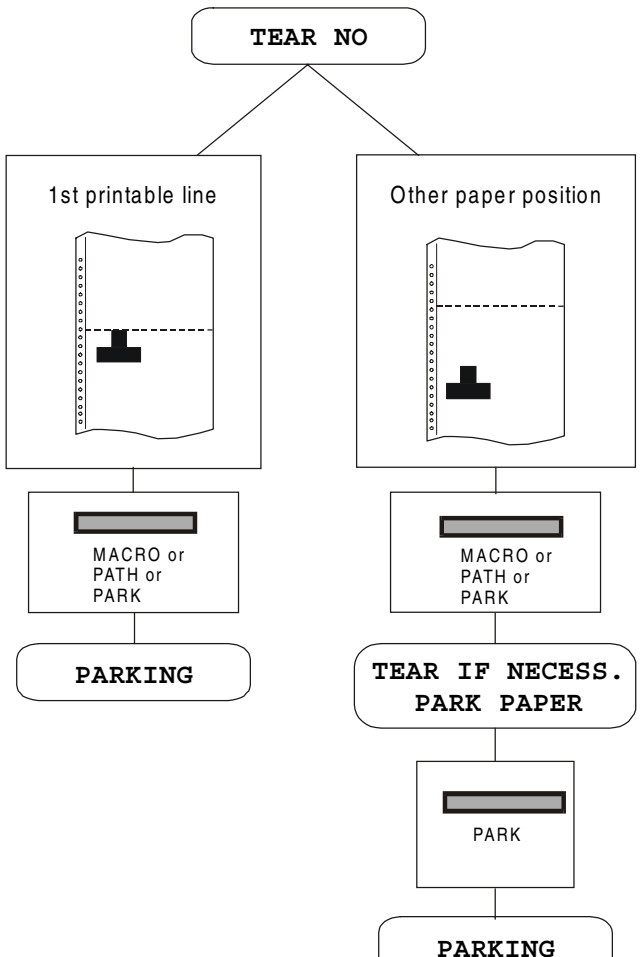

If TEAR NORMAL is selected:

- When the paper is positioned at the first printable line and the paper path is changed (changing the Macro or pressing the PATH key) or the PARK key is pressed, the printer performs automatically the parking procedure.

- If at least one line has been printed, or the paper has been fed forward at least 1 line and the paper path is changed (changing the Macro or pressing the PATH key) or the PARK key is pressed, the paper is moved to the tear-off position and the display shows TEAR IF NECESS./PARK PAPER. If the paper to be parked is longer than 18" tear it off and press the PARK key again to perform the parking procedure.

- When the paper is positioned in the tear-off position after pressing the TEAR key, if you press the PARK key the printer performs automatically the parking procedure.

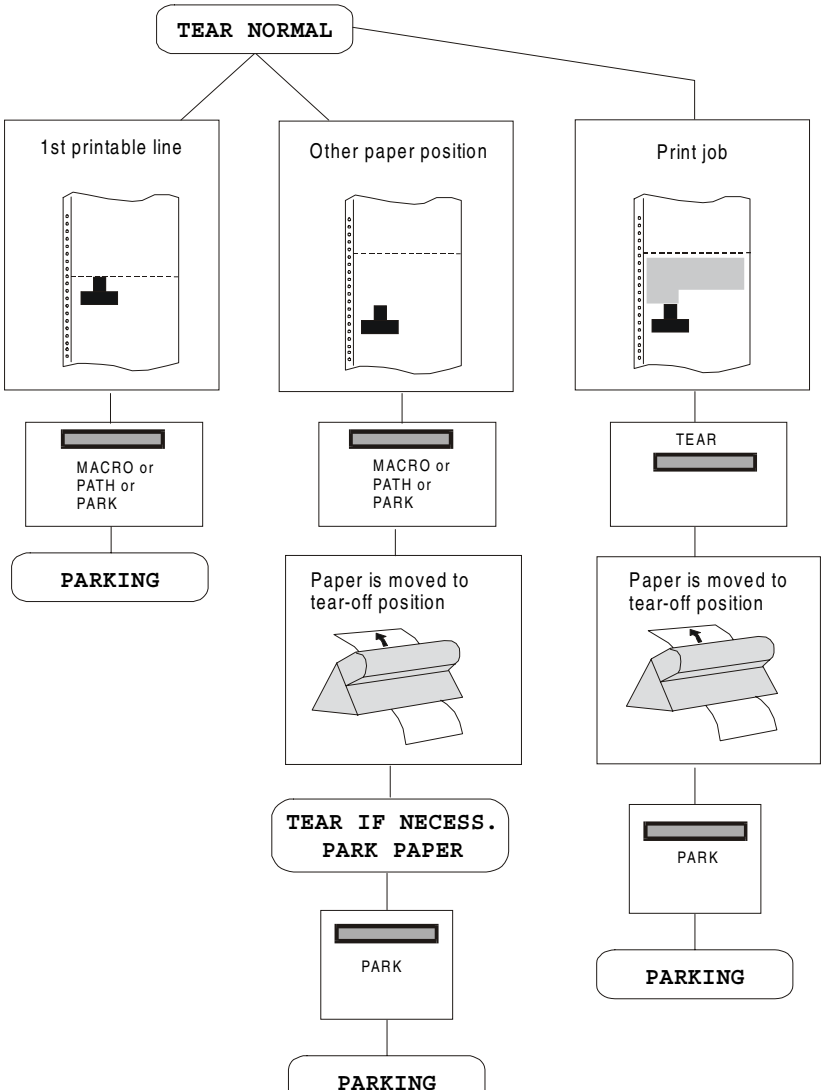

If TEAR AUTOMATIC is selected:

- When the paper is positioned at the first printable line and the paper path is changed (changing the Macro or pressing the PATH key) or the PARK key is pressed, the printer performs automatically the parking procedure.
- If at least one line has been printed, or the paper has been fed forward at least 1 line and the paper path is changed (changing the Macro or pressing the PATH key) or the PARK key is pressed, the paper is moved to the tear position, the display shows TEAR IF NECESS./ PARK PAPER. If the paper to be parked is longer than 18" tear it off and press the PARK key again to perform the parking procedure.
- If at least one line has been printed, or the paper has been fed forward at least 1 line and the paper path is changed (changing the Macro or pressing the PATH key) or the PARK key is pressed when the paper is already in the tear position, the printer performs automatically the parking procedure.

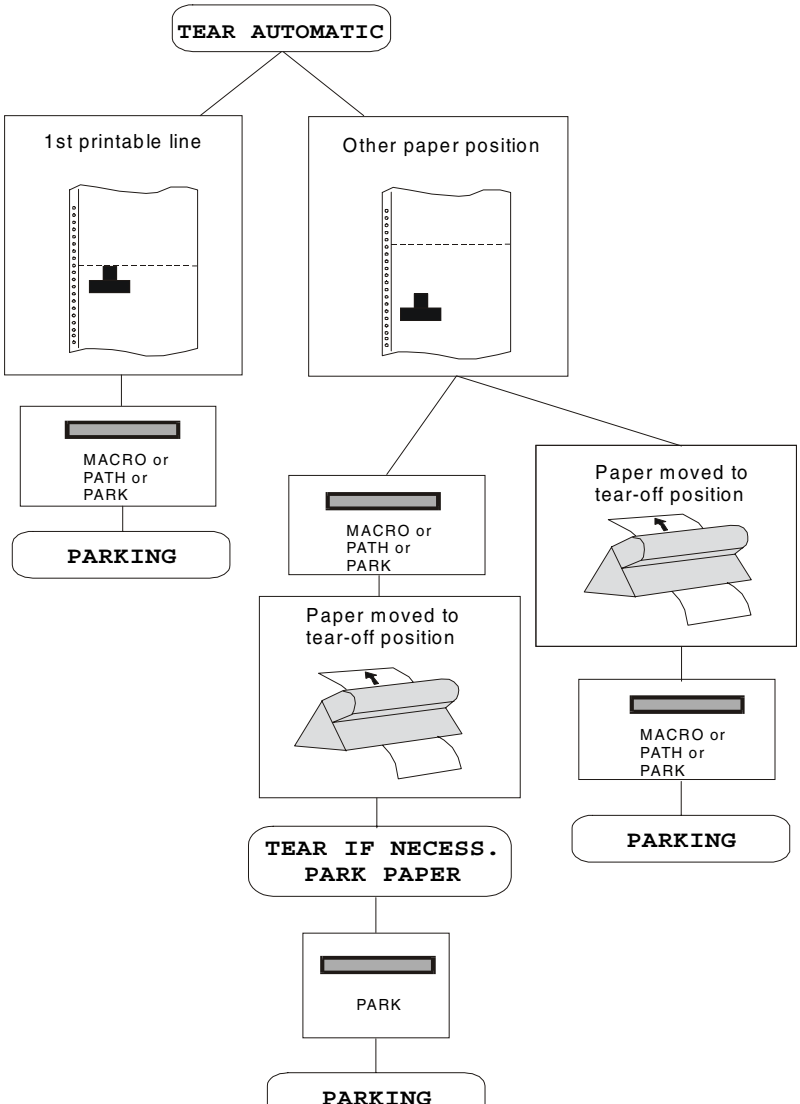

If LABEL is selected:

- When the paper is positioned at the first printable line and the paper path is changed (changing the Macro or pressing the PATH key), or the PARK key is pressed the printer automatically ejects the paper towards the rear of the printer.

- If at least one line has been printed, or the paper has been fed forward at least 1 line and the paper path is changed (changing the Macro or pressing the PATH key) or the PARK key is pressed, the display shows TEAR IF NECESS./EJECT PAPER. If the paper to be ejected is longer than 18" tear it off and press the PARK key again to perform the paper ejection.

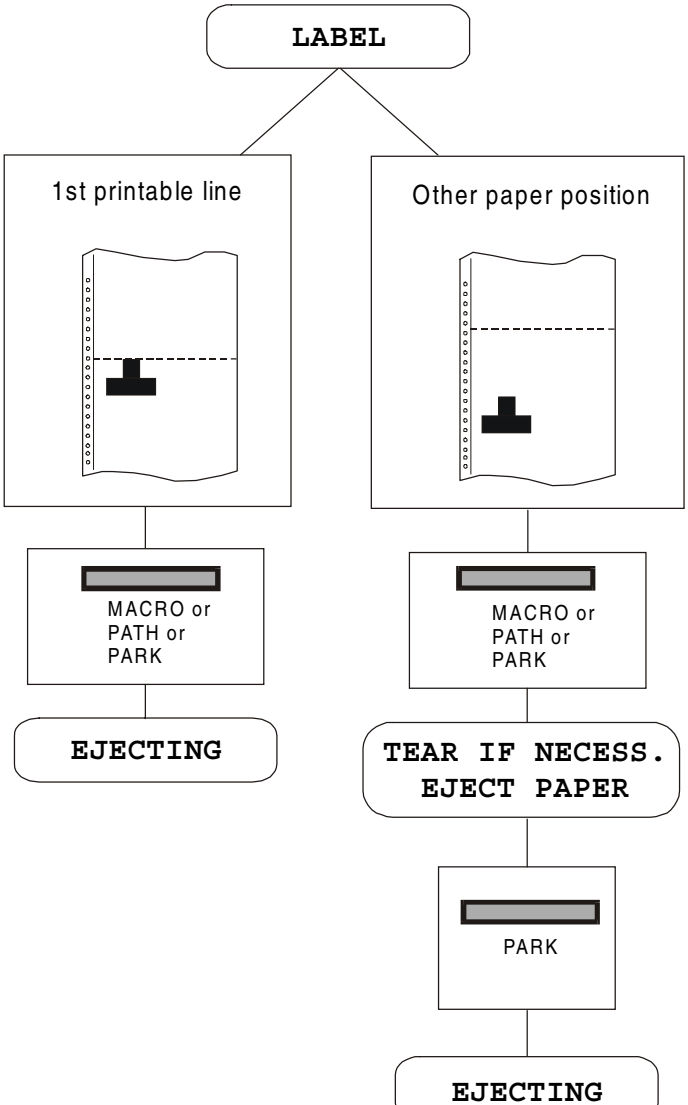

If at power on the paper is already loaded in a paper path that is different to the paper path used by the macro which is valid at power-on, independently from the setting of the TEAR function, the display shows TEAR IF NECESS./EJECT PAPER. If the paper to be ejected is longer than 18" tear it off and press the PARK key again to perform the paper ejection.

In all the above cases the parking procedure may be interrupted pressing the ALTERNATE key. The display shows OPER. INTERRUPTED.

If in any of the above cases you do not tear off the paper and the printer is not able to park it, because it is too long, the display shows TEAR OFF PAPER/PARK PAPER. Tear off the paper and press again the PARK key.

During the parking procedure the display shows PARKING. If the printer is ejecting the paper (see LABEL selection) the display shows EJECTING.

Paper Handling

Paper Paths

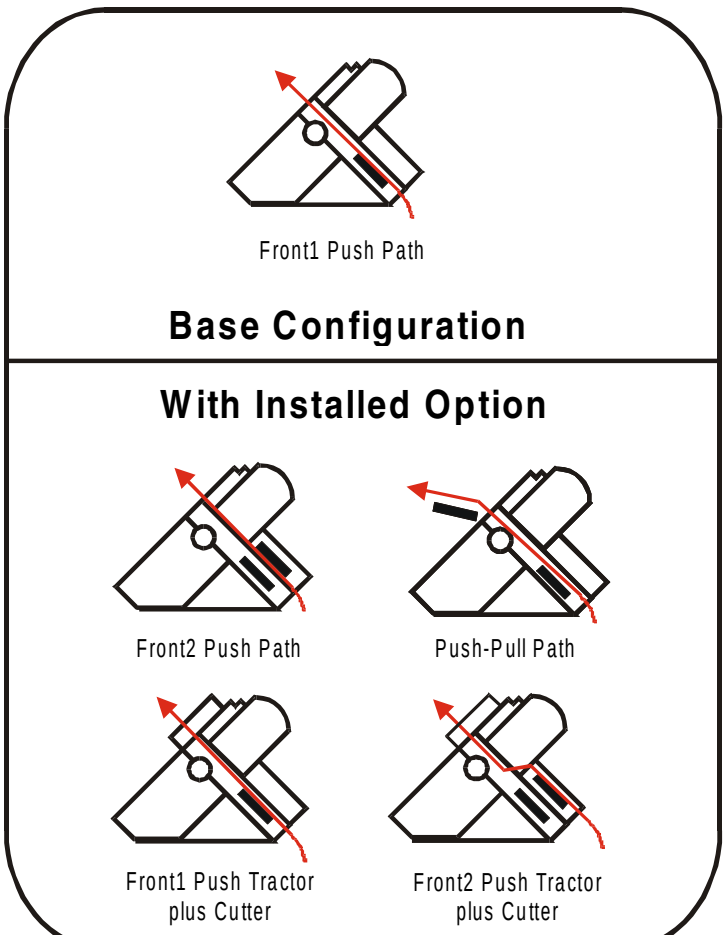

Paper Specifications

It is important to use the correct paper for obtaining the best performance. See the information table below:

Fanfold Paper

Loading Mode	Front1 Tractor	Front2 Tractor (option)	Push-Pull (option)
Width	76 to 432 mm 3 to 17 inches	76 to 432 mm 3 to 17 inches	76 to 432 mm 3 to 17 inches
Length	76 to 609 mm 3 to 24 inches	76 to 609 mm 3 to 24 inches	76 to 609 mm 3 to 24 inches
Thickness	max.0.635 mm 0.025 inches	max. 0.635 mm 0.025 inches	max. 0.3 mm 0.014 inches
Copies	1 + 7	1 + 7	1 + 7
Weight (g/m^2):			
- Original	55 to 150	55 to 150	55 to 150
- Other sheets	45 to 75	45 to 75	45 to 75
- Carbon Paper	35	35	35

Fanfold Paper Loading

Loading Paper Using the Front1 Push Tractor

1. To select the Front1 push tractor paper path, press the PATH key. The display shows:

```
LOAD FRONT1
```

- If you have been using a different path, the display shows:

```
PATH CHANGING
```

- If you have been using fanfold paper in the Front2 push tractor paper path (if the Front2 push tractor option is installed), the printer automatically starts the parking procedure. The display shows alternately:

```
TEAR IF NECESS.
```

and

```
PARK PAPER
```

- Tear off the fanfold loaded with the Front2 push tractor (if it is longer than 18 inches) and press the PARK key. The display shows:

```
PARKING
```

followed by

```
LOAD FRONT1
```

2. Open the Push tractors cover turning it upwards and lay it on the top of the printer.

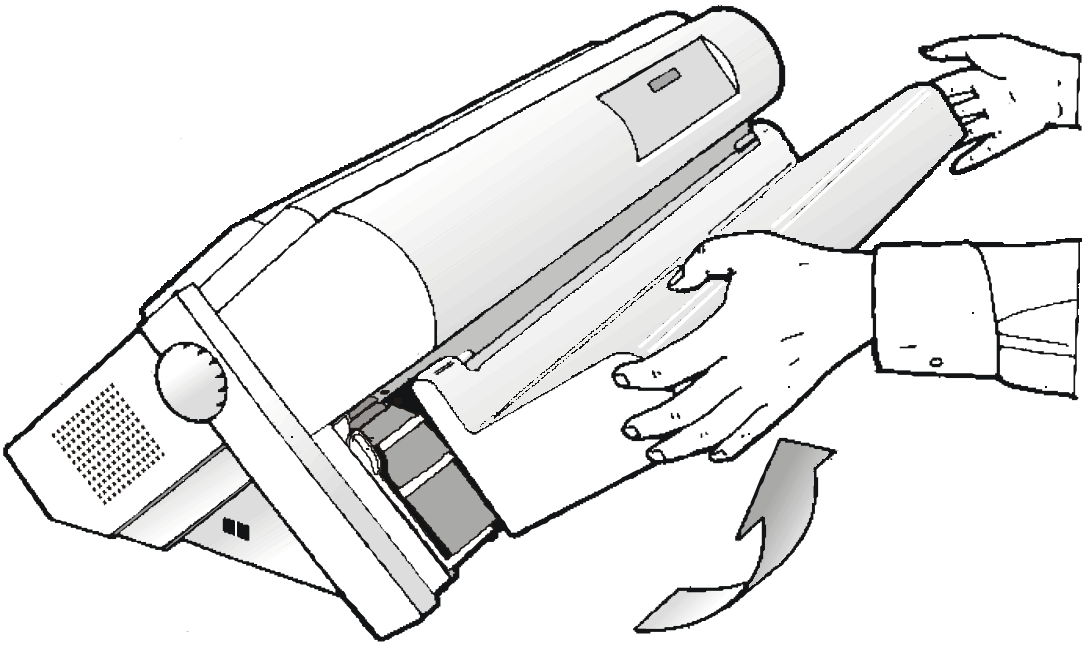

3. Unlock the sprockets of the Front1 tractor moving the sprocket levers up. Slide the left sprocket to the first printing column.

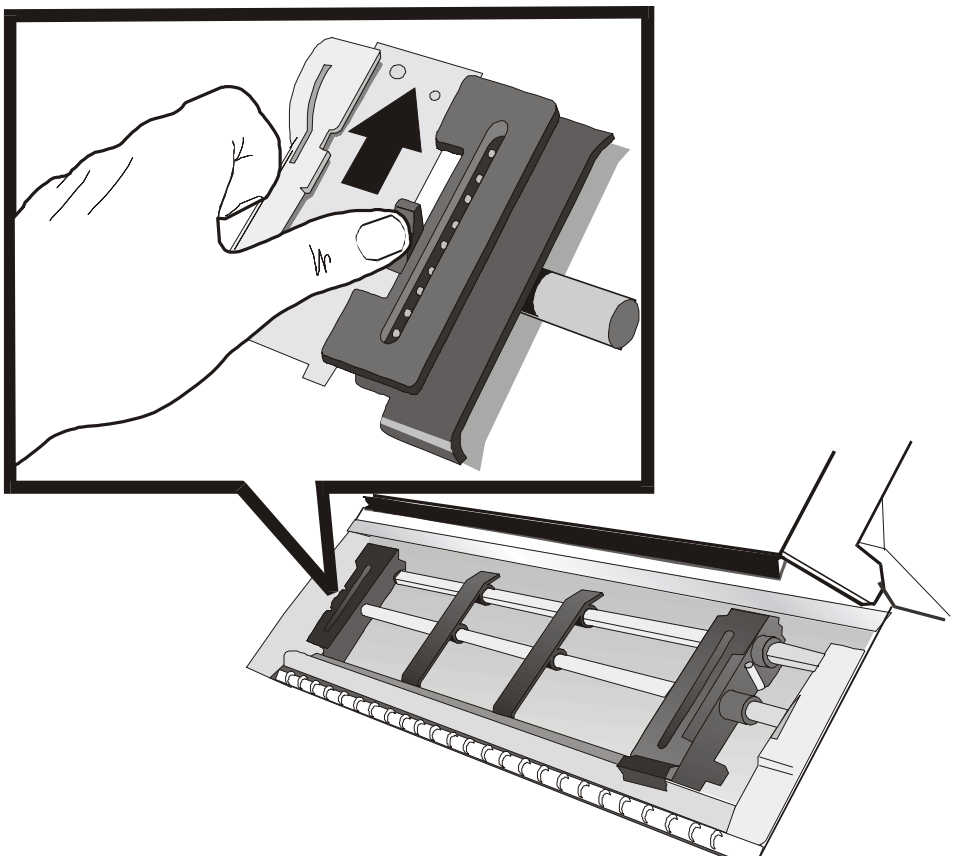

4. Space the paper guides along the tractor bar. Open the left and right sprocket covers.

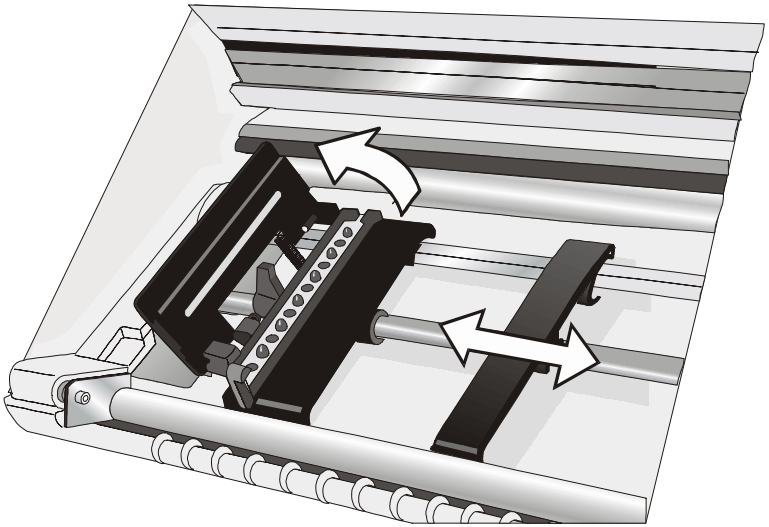

5. Hold the fanfold paper in front of the sprockets and insert the paper perforation on the left sprocket pins and close the left sprocket cover.

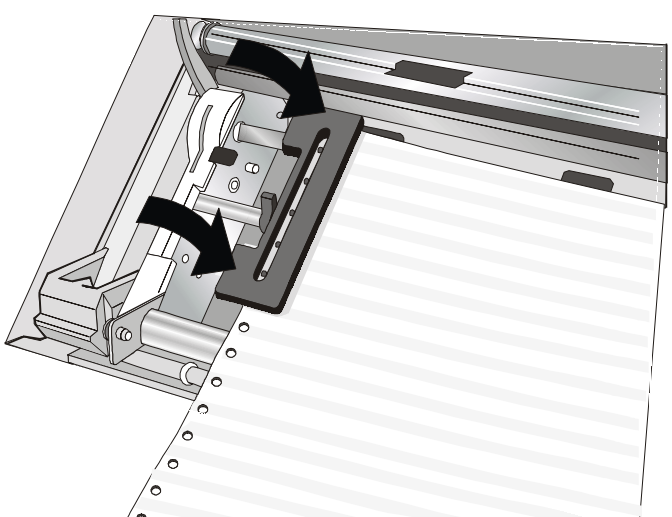

6. Insert the paper on the right sprocket pins, make sure the paper goes under the paper sensor and close the right sprocket cover.

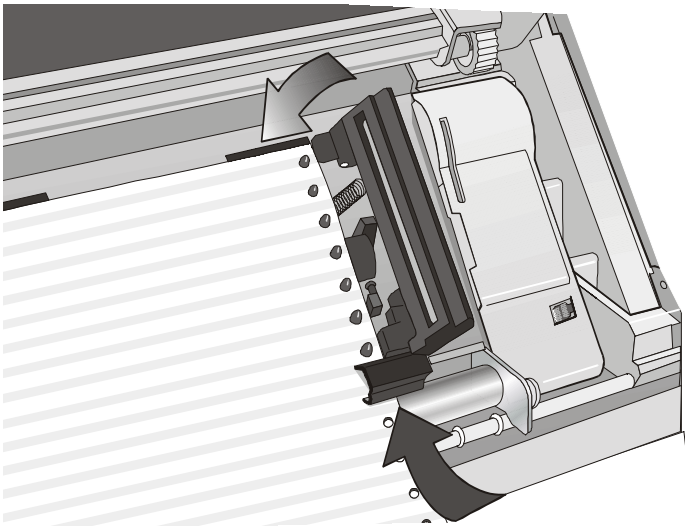

7. Match the left sprocket for the first printing position, i.e. the left paper margin must match the ninth mark on the printer cabinet.

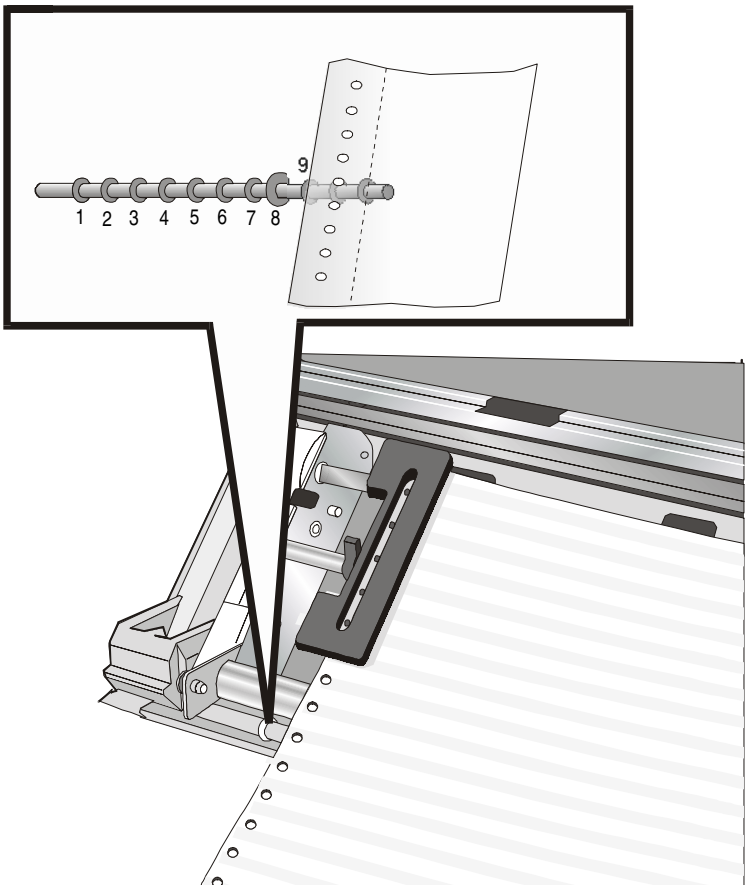

8. Adjust the right sprocket gently to remove slack from the paper.

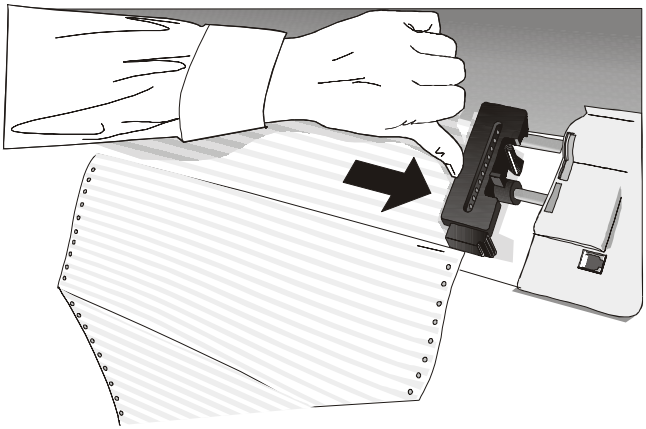

Make sure the paper is not taut.

9. Lock the left and right sprockets moving the sprocket levers down.

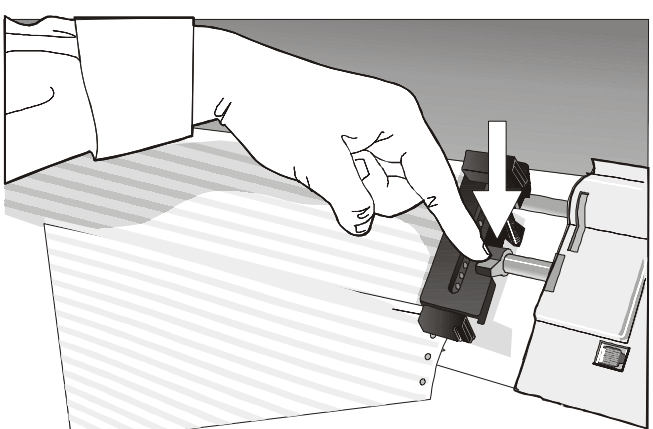

10. Close the Push tractors cover.
    Press the LOAD/FF key to load the paper into the printer.

The paper must be loaded as shown in figure.

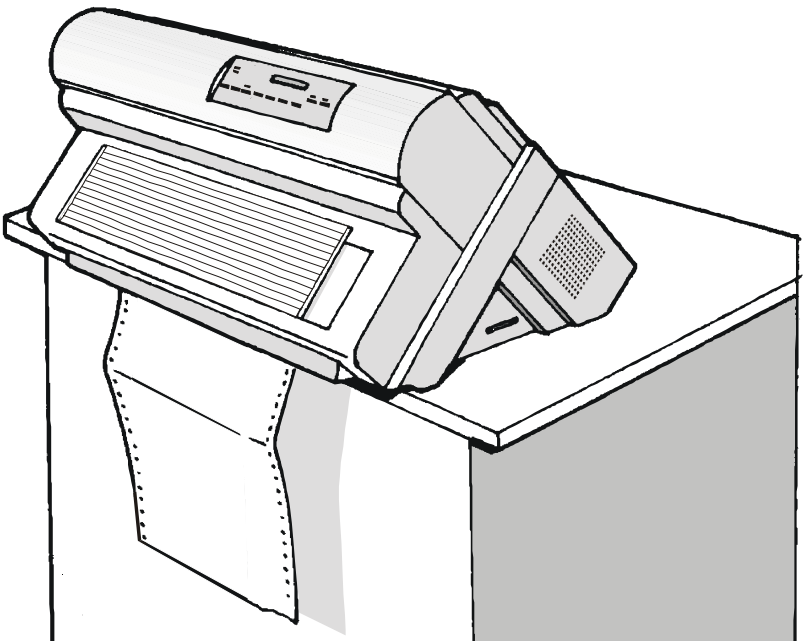

Printer Maintenance and Troubleshooting

Cleaning the Printer

Make sure the printer has been turned off for at least 15 minutes before starting any cleaning operations.

Periodic cleaning will help keep your printer in top condition so that it will always provide optimal performance.

- Use a neutral detergent or water solution on a soft cloth to clean dirt and grease from the cabinet of the printer.
- Do not use an abrasive cloth, alcohol, paint thinner or similar agents because they may cause discoloration and scratching.
- Be especially careful not to damage the electronic and mechanical components.

Replacing the Ribbon Cartridge

1. Make sure that the printer is turned off for at least 15 minutes.

Pay attention to the print head because it becomes hot during operation.

2. Open the top printer cover.
3. Slide the ribbon guide out of the print head. Free the shifter holder pushing the tab towards the rear and pulling the shifter holder up.

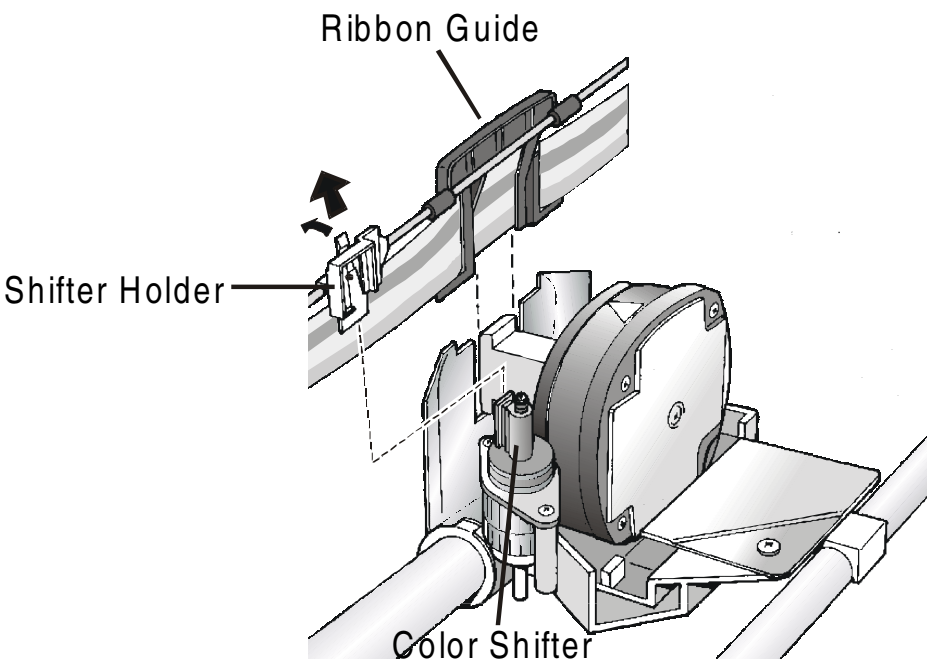

4. Remove the used ribbon cartridge by lifting it up.

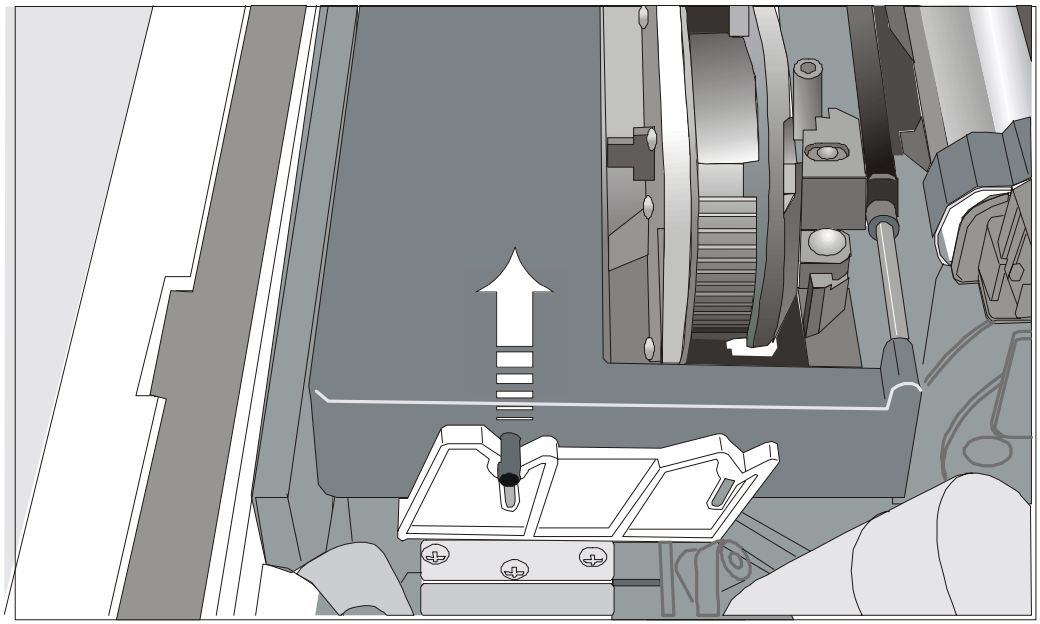

Now, you are ready to insert the new ribbon cartridge. See before "Ribbon Cartridge Installation".

Printing the Self Test

If you need to know any printer setting, and to check if the printer is working well, print the self-test.

Proceed as follows:

1. Keep the ON LINE key pressed while powering on the printer until the display shows `RELEASE KEY`.
2. When you release the key, the printer starts the self-test printout.
3. To stop the self-test printing, press the ON LINE key again. The printer is offline.

Error Handling

When an error condition occurs:

- the printer is disabled;
- the first message on the display indicates the error, while the second message gives more details concerning the error conditions.

Press always the ON LINE key to reset the error condition.

Error Message Description

Messages	Indication	Solution
A.G.A NOT OPER ADJUST THE GAP	The automatic gap adjustment (A.G.A) is not enabled.	Press the ON LINE key to reset the error condition. Adjust the print head gap to a fixed distance. Select the print head fixed gap adjustment function in the *Program Menu*. • Press the PROGRAM key when the printer is disabled (READY indicator unlit) to enter the *Program Setup*. • Press the ↓ key until the `USER MACRO` function is displayed. Press the → key until the desired macro is displayed (`MACRO#`*x*). Press the → key to enter the macro parameters. Press the ↓ key until the `FIXED GAP` parameter is displayed. Press the → o ← keys to select the fixed gap adjustment values. From `FIXED GAP 1` (simple fanfold paper) to `FIXED GAP 4` (multipart fanfold paper).

Messages	Indication	Solution
BUFFER OVERFLOW CHARACTER LOST	A buffer overflow condition occurred (for the serial interface).	Turn the printer off and on again, or press the PROGRAM and ON LINE key successively to clear the buffer.
CUT NOT ALLOWED NUM.LINES < 12	An error occurred with the optional cutter	Turn the printer off and on again. If the error is not solved, call the Customer Support.
DATA SET OFF	The DSR Signal is not connected to the printer and is not ready for data transfer (if the serial interface is selected). This condition may happen in a remote connection (via modem) and the DSR (DATA SET READY) signal is missing.	Press the ON LINE key to reset the error condition.
INTERLOCK ERROR CHECK INSERTION	Neither the rear tractor nor the tractor cover are installed on the printer.	Install the rear tractor or the tractor cover on the printer.
JAM FRONT1 PATH CHECK PAPER	A paper jam error condition occurred in the Front1 paper path	Check the paper path and remove the jammed paper. Press the ON LINE key to reset the error condition.
JAM FRONT2 PATH CHECK PAPER	A paper jam error condition occurred in the Front2 paper path	Check the paper path and remove the jammed paper. Press the ON LINE key to reset the error condition.
NO PATH AVAILABLE	An electromechanical failure occurs in the	Call Service.

Messages	Indication	Solution
	Front1 or Front2 push tractor paper paths	
NVM CHANGE REMOVE PAPER	If this error is displayed during the printer power on, an NVM error condition occurs	Turn the printer off and then on again. If the problem is not solved call Service.
PAPER JAM CHECK ALL PATHS	A paper jam error condition occurs in the paper path	Check all the paper paths and remove the jammed paper. Press the ON LINE key to reset the error condition.
PRINT INTEGRITY	Anomalous print out because of a possible print carriage blocking	➢ Do not move the platen knob. Press the ON LINE key to reset the error condition
RIBBON BLOCKED CHECK RIBBON	The ribbon of the cartridge is blocked	Check that the ribbon is correctly inserted. Turn the tension knob to make sure that the ribbon is not jammed. Press the ON LINE key to reset the error condition.
UNKNOWN TRACTOR	A tractor type that is not recognized has been mounted on the printer.	Check that the installed tractor is compatible with the printer.

The Front2 Push Tractor

An optional second front push tractor can be installed on the printer. This tractor allows the handling of a second fanfold paper.

Installing the Front2 Push Tractor

This second push tractor can be installed in front position on the Front1 Push tractor.

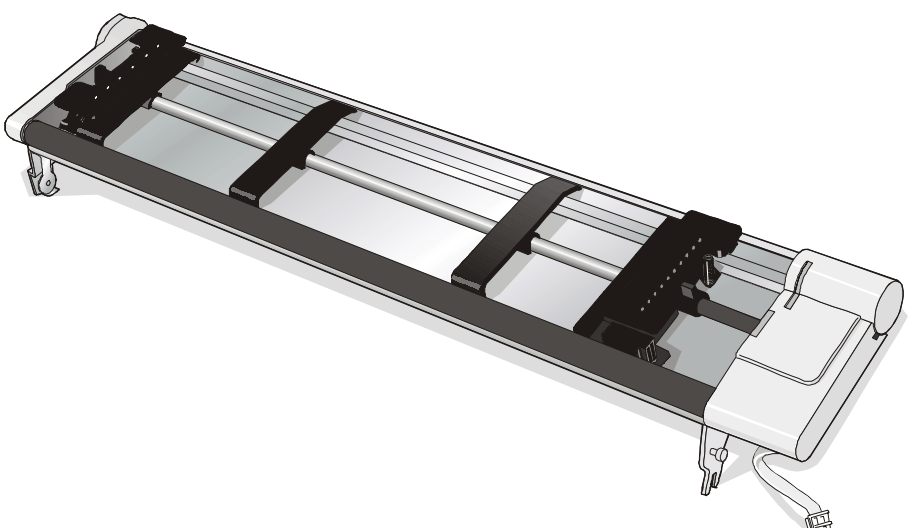

1. Align the hooks on both sides of the Front2 push tractor with the pins on the Front1 push tractor.

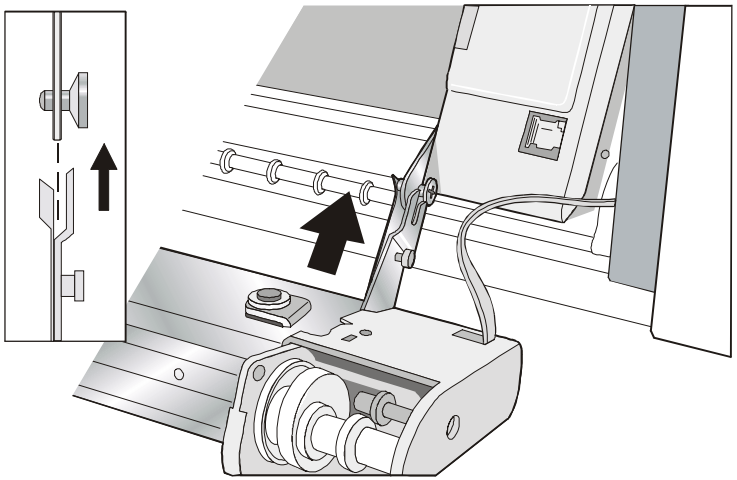

2. Push the Front2 tractor until it is fully engaged.

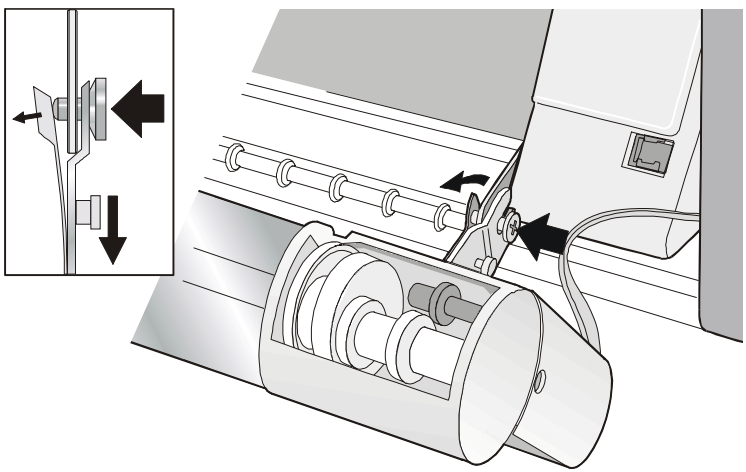

3. Insert the connector cable in the electrical connector located in the lower push tractor.

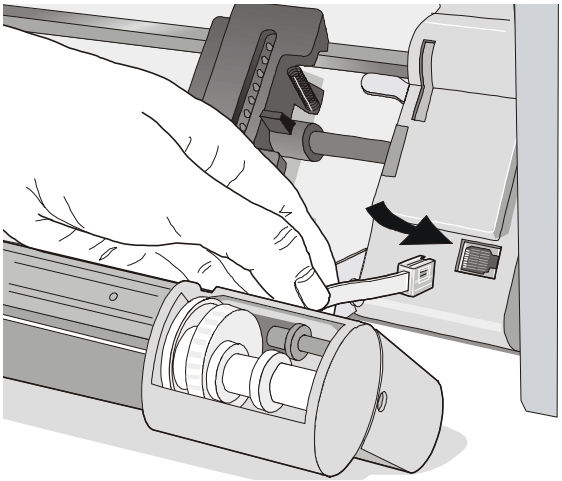

4. Rotate the Front2 push tractor onto the Front1 push tractor.

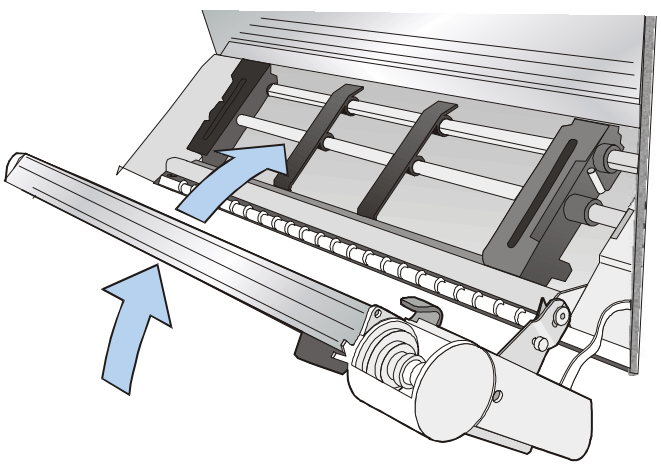

Removing the Front2 Push Tractor

If you need to remove the Front2 push tractor, turn the printer off. Disconnect the connector cable and press on the push buttons to disengage the Front2 push tractor.

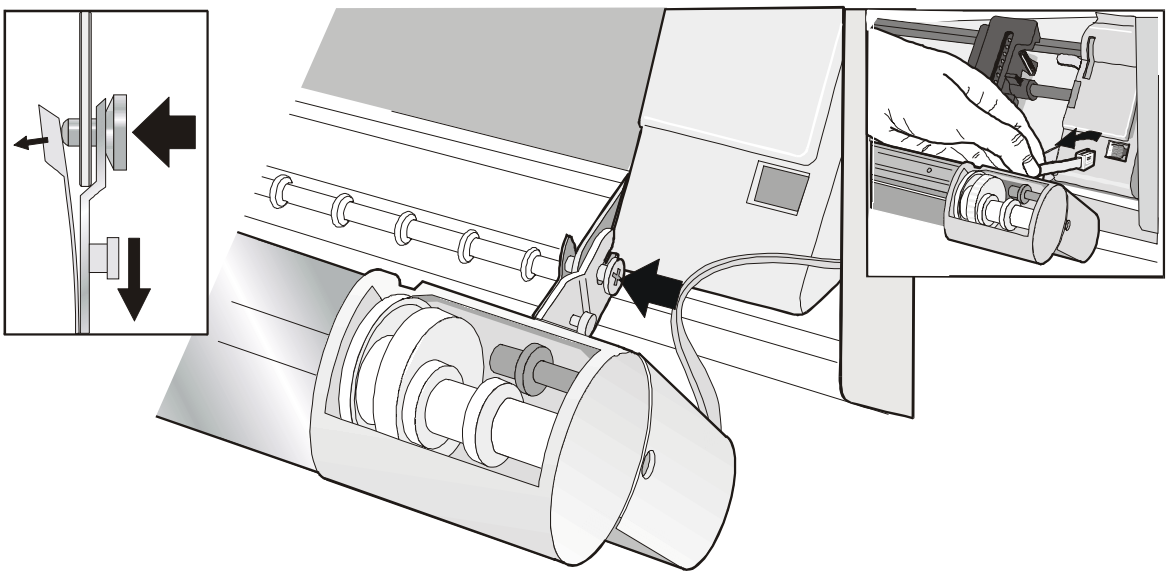

Loading Paper Using the Front2 Push Tractor (option)

1. To select the Front2 push tractor paper path press the PATH key until the display shows:

```
LOAD FRONT2
```

- If you have been using a different path, the display shows:

```
PATH CHANGING
```

- If you have been using fanfold paper in the Front1 push tractor paper path, the printer automatically starts the parking procedure. The display shows alternately.

```
TEAR IF NECESS.
```
and
```
PARK PAPER
```

- Tear off the fanfold loaded with the Front1 push tractor (if it is longer than 18 inches) and press the PARK key. The display shows:

```
PARKING
```

followed by

```
LOAD FRONT2
```

2. Open the Push tractors cover turning it upwards and lay it on the top of the printer.

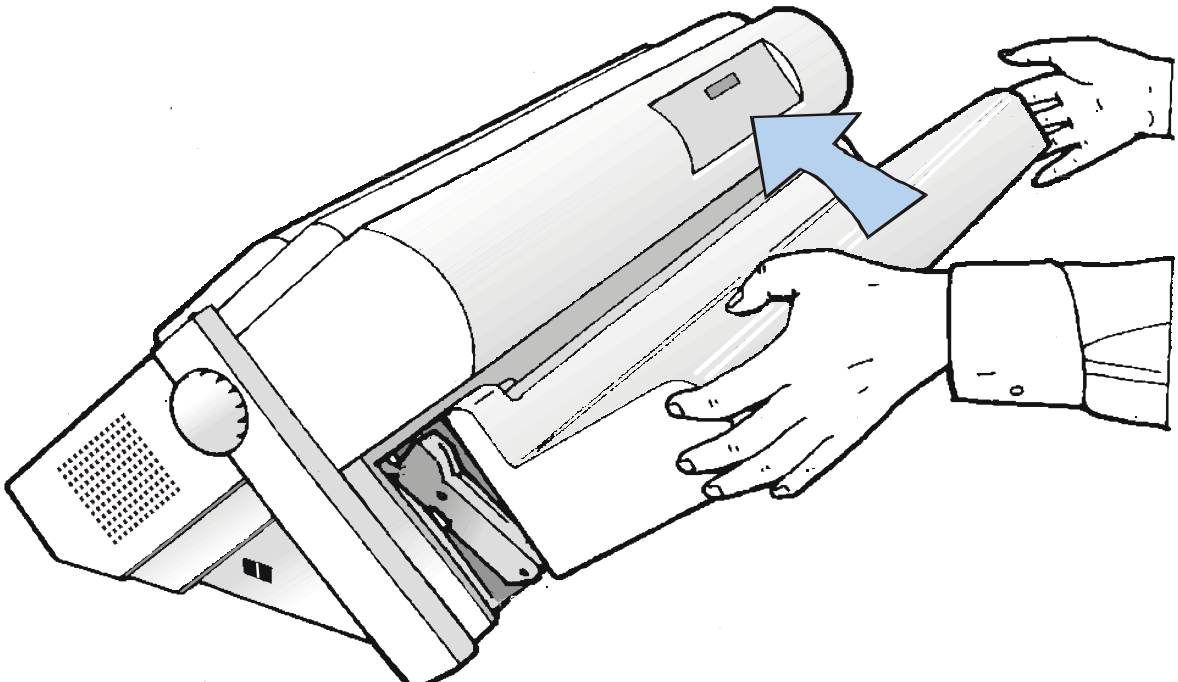

3. Unlock the Front2 tractor sprockets moving the sprocket levers up.

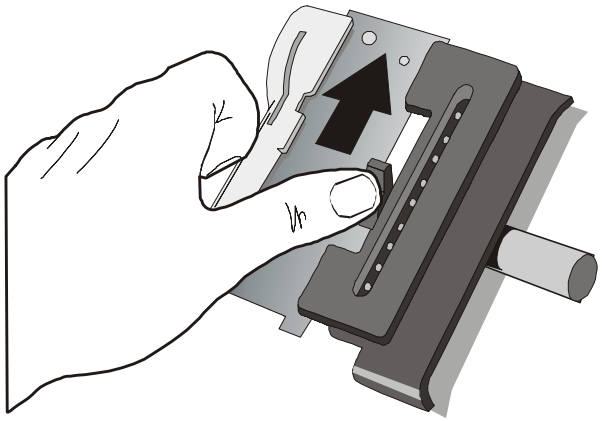

4. Space the paper guides along the tractor bar. Open the sprocket covers of the left and right sprocket.

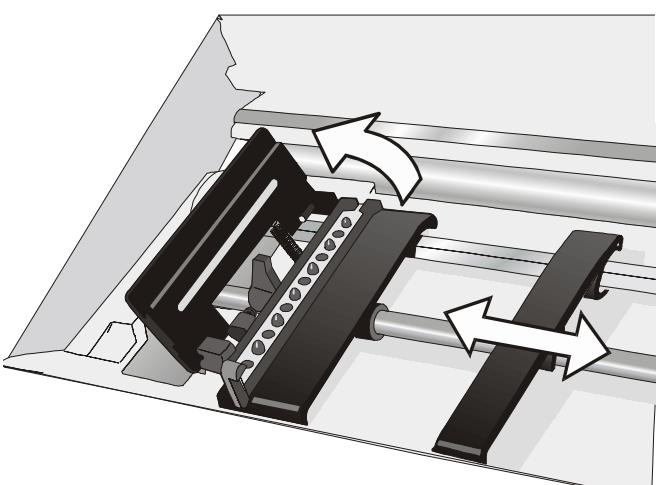

5. Hold the fanfold paper in front of the sprockets and insert the paper perforation on the left sprocket pins and close the sprocket cover.
6. Insert the paper on the right sprocket pins, make sure the paper goes under the paper sensor and close the sprocket cover.

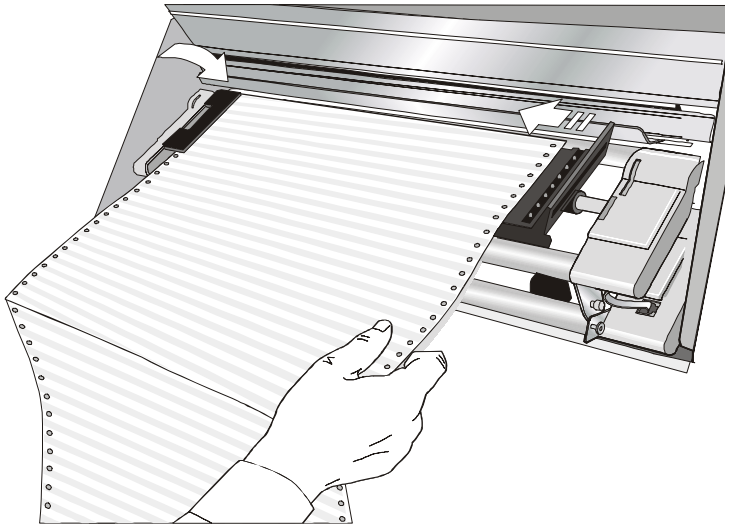

7. Position the left sprocket for printing, matching the left paper margin with the ninth notch on the printer cabinet and lock it in place.

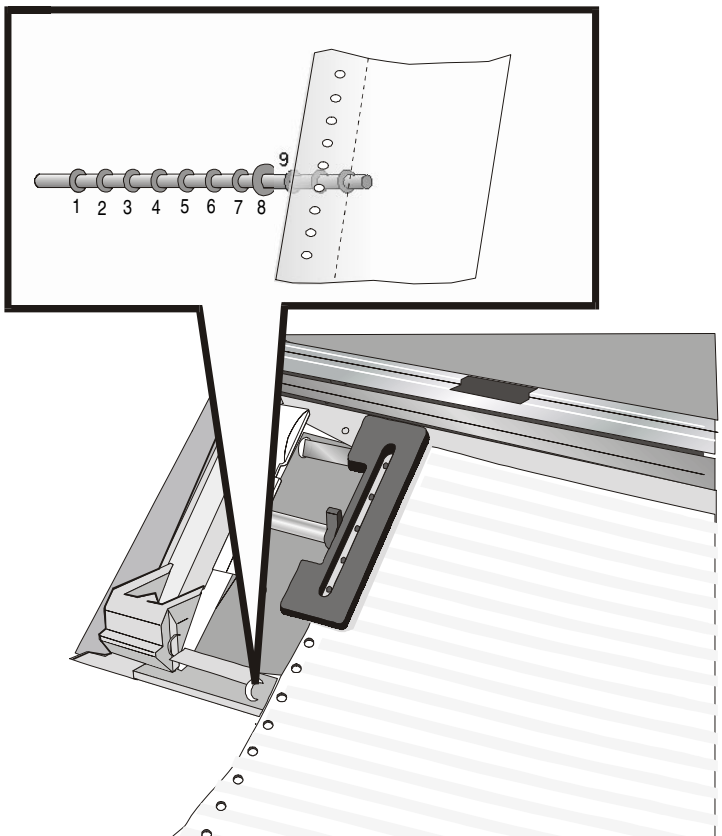

8. Adjust gently the right sprocket to remove slack from the paper.

9. Lock the Front2 tractor sprockets moving the sprocket levers down.

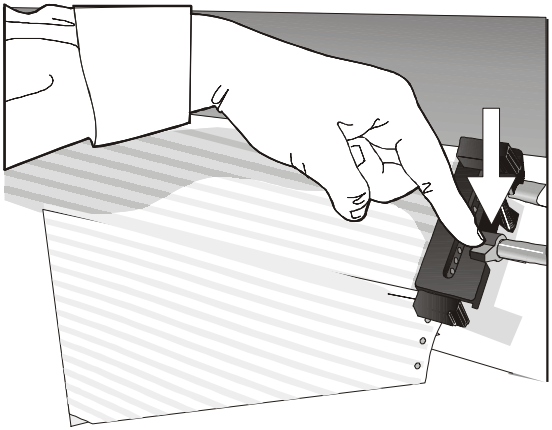

10. Close the Push tractors cover.
11. Press the LOAD/FF key to load the paper into the printer.

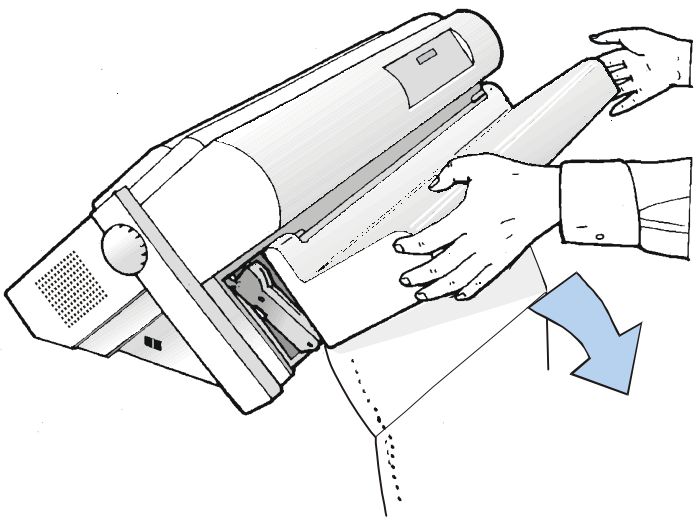

Loading Paper Using the Front1 Push Tractor when the Front2 Push Tractor (Option) is Installed

When the Front2 push tractor is installed and you need load paper on the Front1 push tractor follow this paper loading procedure:

1. Open the Push tractors cover turning it upwards and lay it on the top of the printer.
2. Rotate the Front2 push tractor option outside the printer.

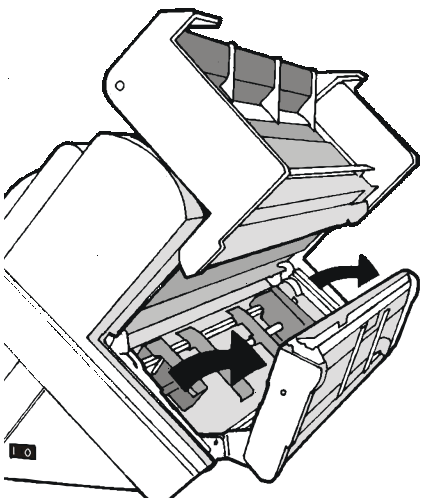

3. Insert the fanfold paper between the Front1 and Front2 push tractor, then proceed to load the paper as described in the section Loading Paper Using the Front1 Push Tractor.

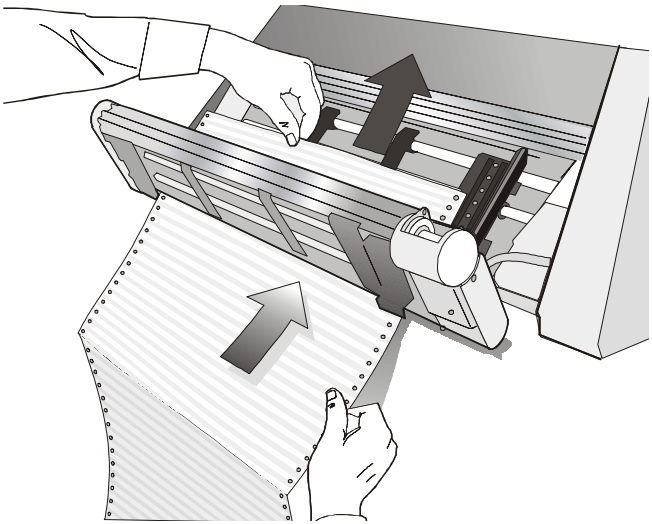

4. When the fanfold paper has been loaded on the Front1 push tractor, reposition the Front2 push tractor in its initial position before closing the Push tractors cover.

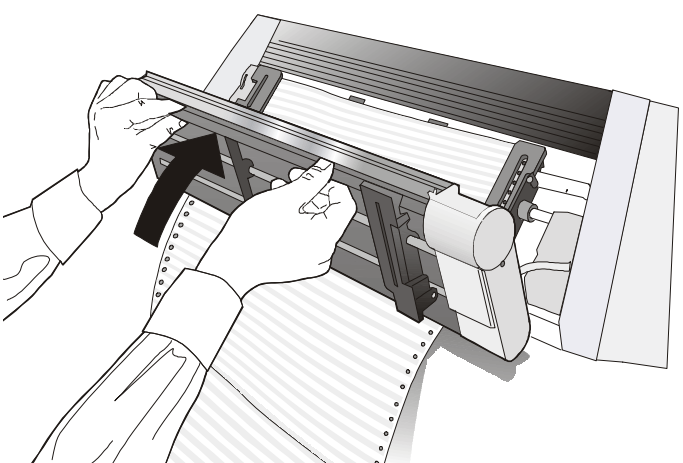

5. Press the LOAD/FF key to load the paper into the printer.

The Rear Pull Tractor

An optional rear pull tractor can be installed on the printer. This tractor is useful to handle particularly heavy paper.

Installing the Rear Pull Tractor

1. Turn the printer off.
2. Remove the Large rear cover, the rear pull tractor cover and the two small rear pull tractor attachment area covers.

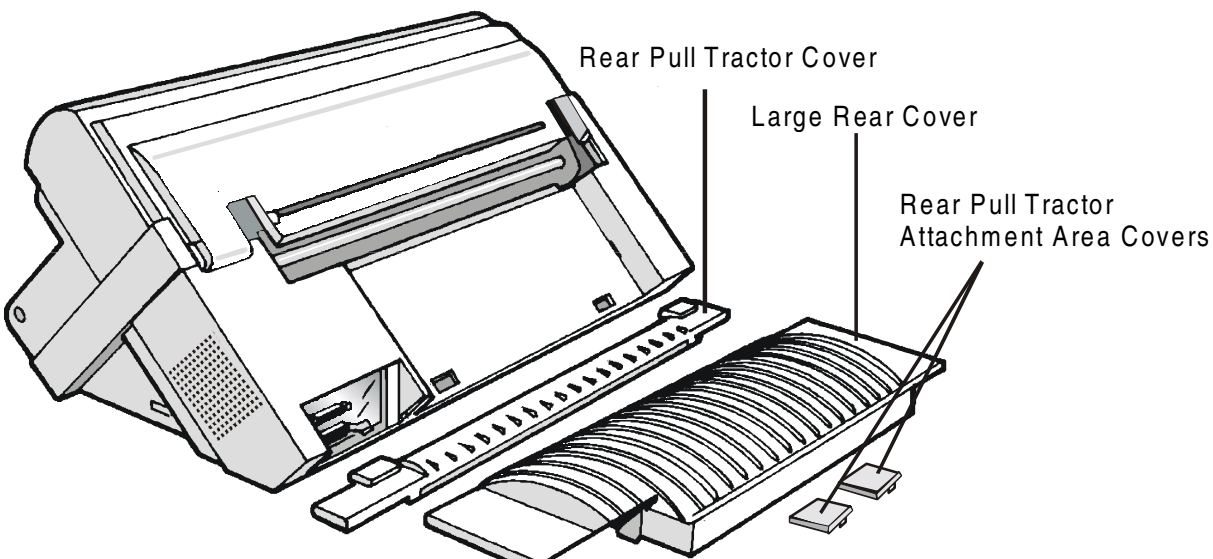

Keep the covers in a safe place, as they must be reinstalled if the rear pull tractor is removed.

3. Replace the Large rear cover.
4. Open the top cover, free (1) the paper bail and remove (2) it from the hooks on both sides of the printer.
5. Close the top cover.

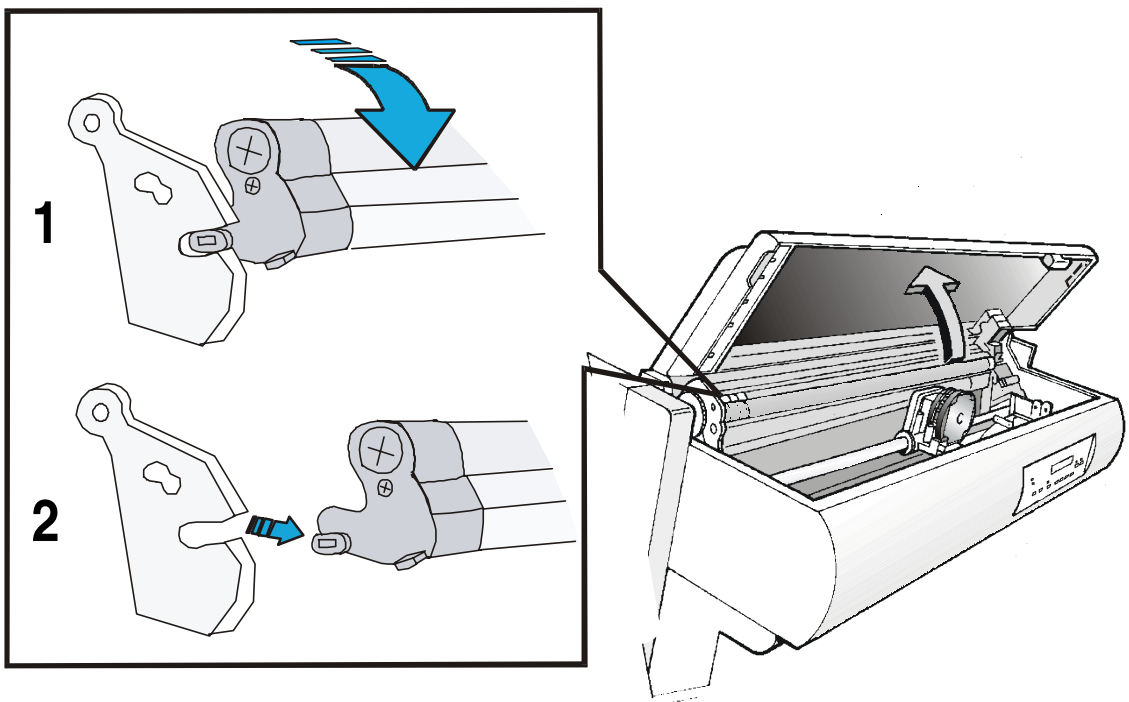

6. Insert the rear pull tractor and the corresponding two small rear pull tractor attachment area covers (with the slot) as shown in figure.

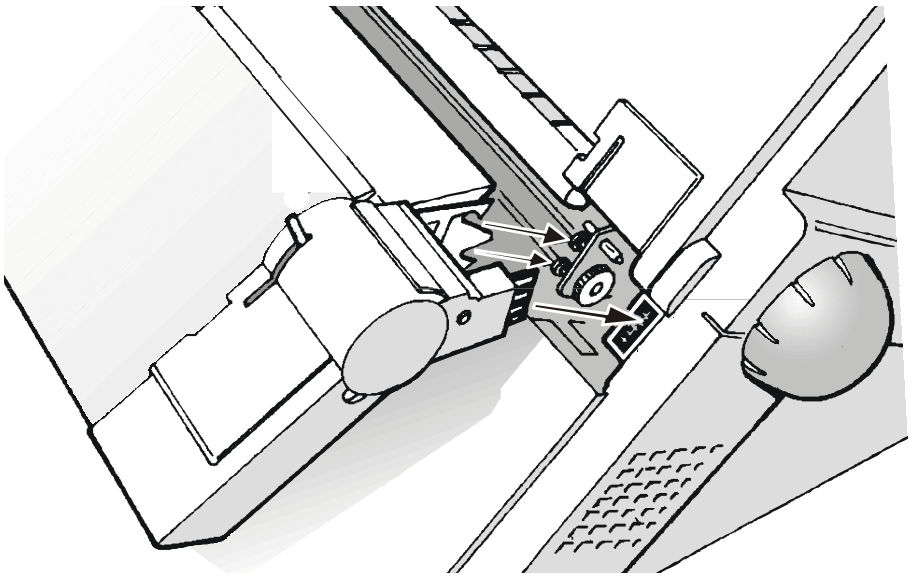

7. Turn the printer on.

Removing the Rear Pull Tractor

1. Turn the printer off.
2. Push the lever on the rear pull tractor down and lift the tractor out of the printer.

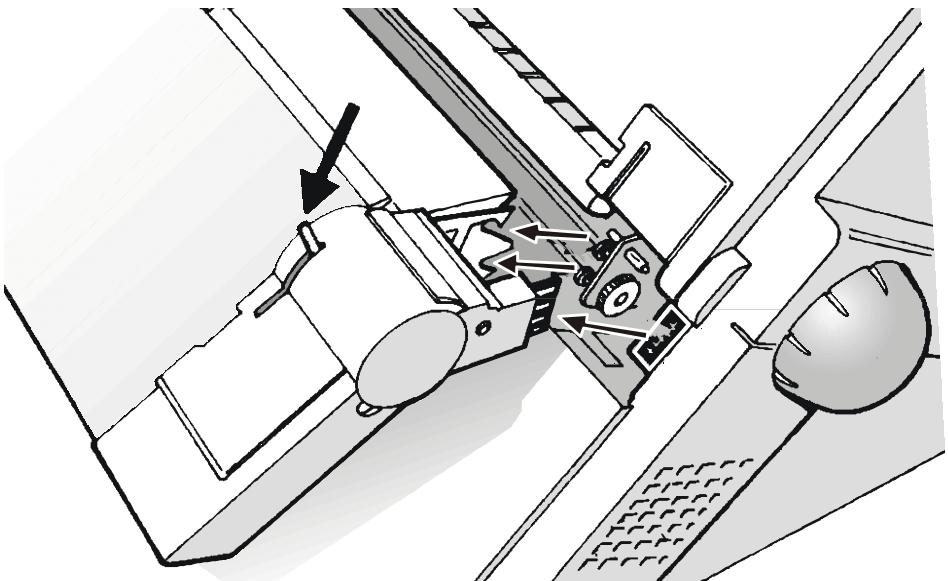

3. Insert the rear pull tractor cover and make sure that the interlock connector is correctly inserted.

If the rear pull tractor cover is not inserted, the printer is blocked.

4. Open the top cover.
5. Move the print carriage to the right most position, then insert (1) the paper bail pins into the hooks on both sides of the printer.
6. Rotate (2) the paper bail upwards and gently push it on both sides towards the back of the printer until it clicks into place.

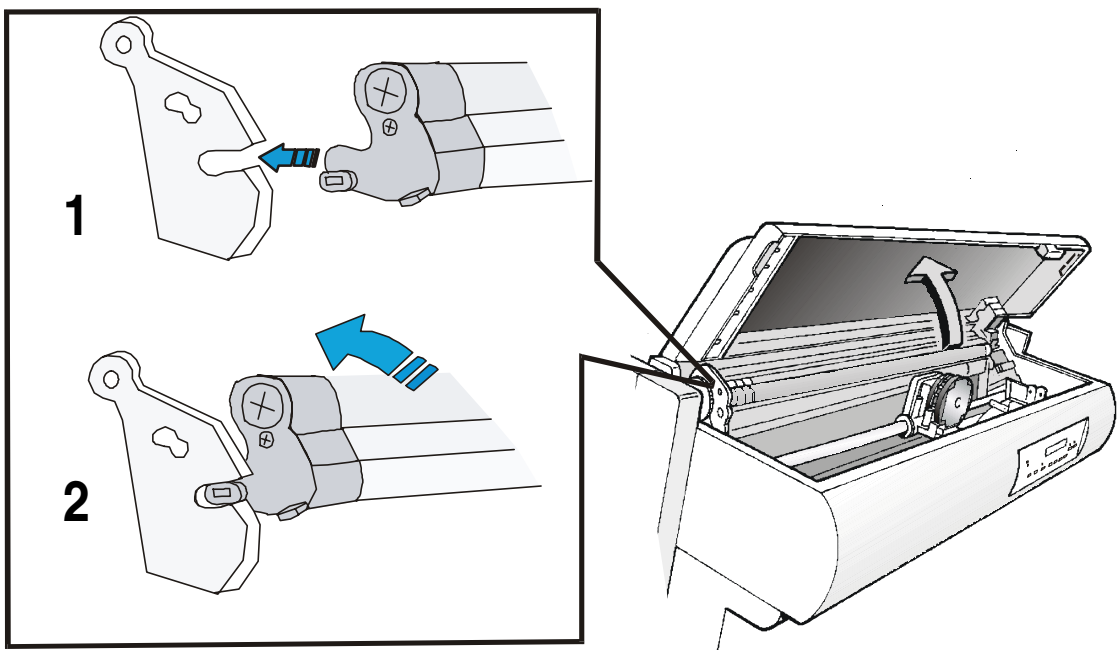

Loading Paper Using the Front1 Push Tractor and the Rear Pull Tractor (option)

Once the rear pull tractor is installed, the fanfold paper can be loaded only in push-pull mode.

1. To select the Push-pull tractor paper path press the PATH key. The display shows:

```
LOAD PUSH-PULL
```

- If you have been using a different path, the display shows:

```
PATH CHANGING
```

- If you have been using fanfold paper in the Front2 push tractor paper path (if the Front2 push tractor option is installed), the printer automatically starts the parking procedure. The display shows alternately:

```
TEAR IF NECESS.
```

and

```
PARK PAPER
```

- Tear off the fanfold loaded with the Front2 push tractor (if it is longer than 18 inches) and press the PARK key. The display shows:

```
PARKING
```

followed by

```
LOAD PUSH-PULL
```

2. Load the fanfold paper on the Front1 push tractor following the sequence Loading Paper Using the Front1 Push Tractor described before.

3. Take up the slack of the paper exiting from the rear paper slot and open the left and right sprocket covers. Unlock the sprockets moving the sprocket levers up.

4. Rotate the sprocket bar to align the sprocket pins with the paper perforation. Insert the paper perforation on the left and right sprocket pins.

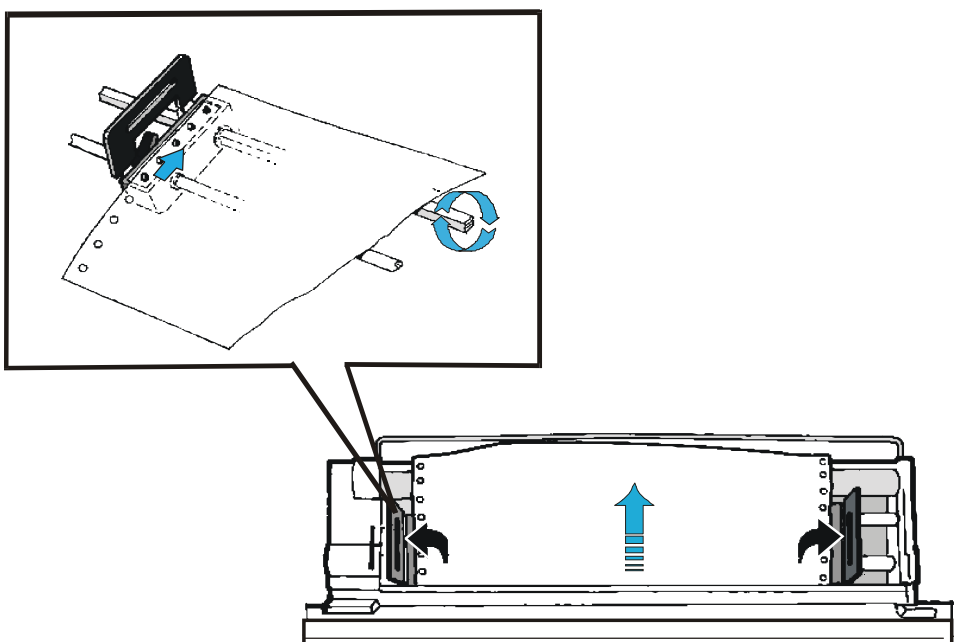

5. Close sprocket covers and lock the sprockets moving the sprocket levers down.

6. Press the ON LINE key to confirm that the paper loading is finished. The rear pull tractor engages.

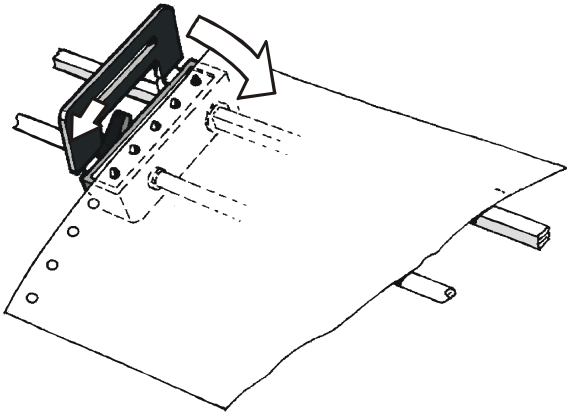

This figure shows the correct paper loading.

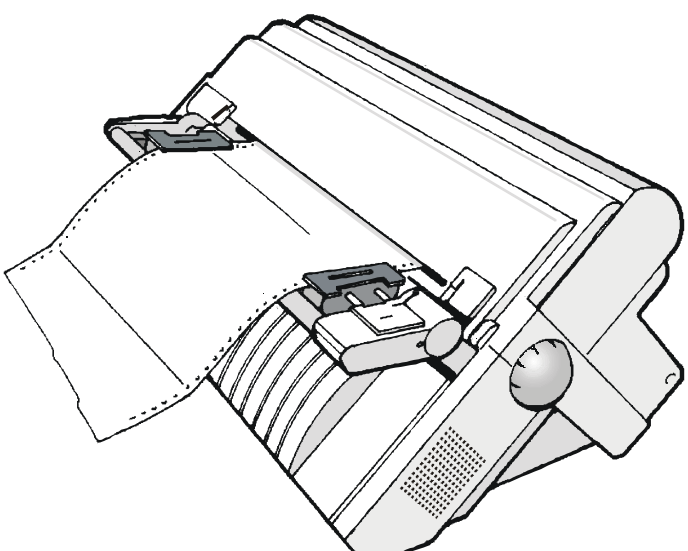

The Cutter

The cutter option allows to cut the paper automatically. It is installed on the rear of the printer.

For the installation of the cutter option and its corresponding paper grid, please refer to the *Installation Guide* you receive together with this option.

This figure shows the cutter position in the printer.

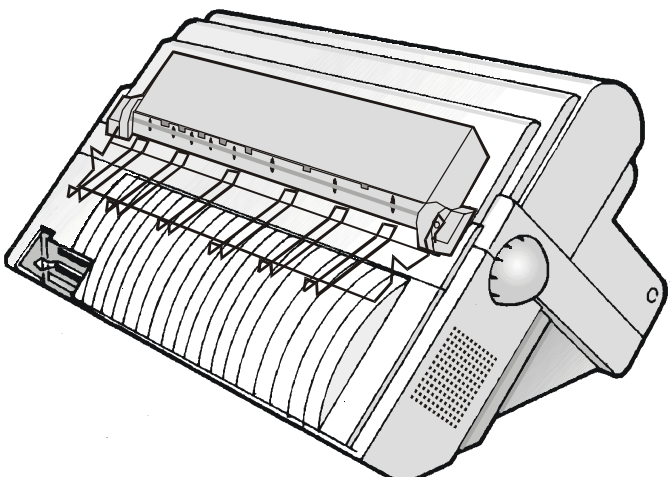

The LAN Interface Board

A LAN Interface board is available for the network connections through an integrated Ethernet 10/100 Base-T interface, which coexists with the parallel interface.

For the installation of this board, please refer to the *Installation Guide* you receive together with the Ethernet 10/100 Base-T board.

The Printer Pedestals

For better paper handling, use the available printer pedestal options:

- Three Levels Floor Pedestal: for large quantity and dual fanfold handling.
- Two Levels Floor Pedestal: with tiltable printer level for document on demand application.

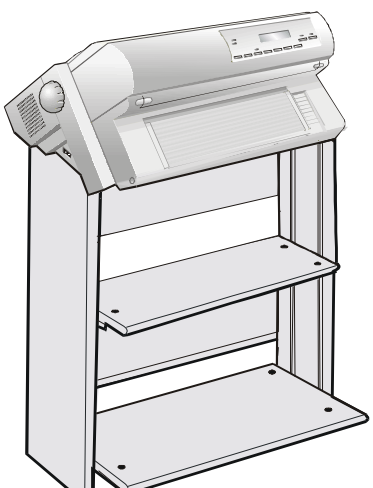

Three Levels Floor Pedestal

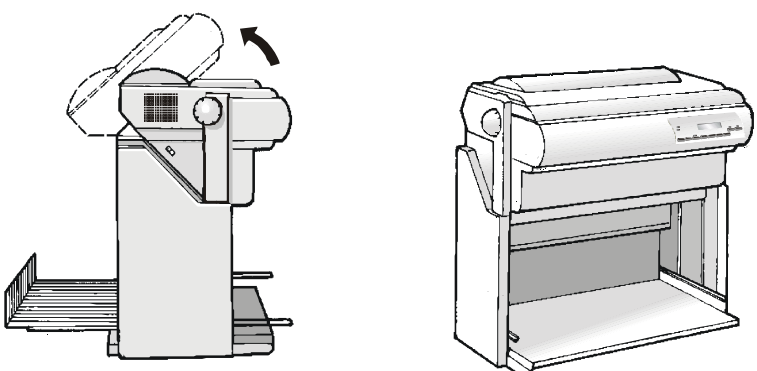

Two Levels Floor Pedestal

Printer Specifications

Printing Characteristics

Print Head	
Matrix	24 pins - 0.25 mm
Print Head Life	700 mil characters (draft)

Print Speed (cps)					
	Draft			Quality	
	HS Draft	Normal	Best Draft	NLQ	LQ
10 cpi	900	800	400	266	133
12 cpi	-	960	480	320	160
micro 15 cpi	-	1200	600	400	200
normal 15 cpi	-	800	400	-	-
17,1 cpi	-	685	343	457	226
20 cpi	-	800	400	532	266
micro 24 cpi	-	960	480	640	320
normal 24 cpi	-	960	480	-	-
Lines per minute @10 cpi in HS Draft mode	540 at 40 characters per line 380 at 80 characters per line 270 at 136 characters per line				

Throughput (ISO/IEC 10561)
650 pages per hour in HS Draft mode

Print Matrix (horizontal x vertical)					
	Draft			Quality	
	HS Draft	Normal	Best Draft	NLQ	LQ
10 cpi	9 x 12	12 x 12	12 x 24	36 x 12	36 x 24
12 cpi	-	10 x 12	10 x 24	30 x 12	30 x 24
micro 15 cpi	-	8 x 8	8 x 16	24 x 8	24 x 16
normal 15 cpi	-	12 x12	12 x 24	-	-
17,1 cpi	-	14 x12	14 x 24	21 x 12	21 x 24
20 cpi	-	12 x 12	12 x 24	18 x 12	18 x 24
micro 24 cpi	-	10 x 8	10 x 16	15 x 8	15 x 16
normal 24 cpi	-	10 x 12	10 x 24	-	-

Print Density (characters per inch)	
Normal	10 - 12 - 15 - 17.1 – 20 - 24

Line length (number of characters)			
10 cpi	136	17.1 cpi	233
12 cpi	163	20 cpi	272
15 cpi	204	24 cpi	326

Vertical Spacing
6, 8, 12 lpi
3, 4, 6, 8, 12 lines/30 mm
n/62, n/72, n/216, n/180, n/360 per inch

Print Styles
Draft – Courier - OCR B - Gothic – Prestige – Present - OCR A - Script

Print Attributes
Sub-superscript, Underline, Overscore, Italics, Emphasized, Double Strike, Shadow, Enlarged, Compressed

Graphic Resolution (dots per inch)	
horizontal	60, 80, 90, 120, 180, 240, 360
vertical	60, 72, 180, 360

Characters Sets	
Standard PC IBM Character Sets	CS1 and CS2
EPSON National Variations	USA, France, Germany, United Kingdom, Denmark-1, Sweden, Italy, Japan, Spain-1, Norway, Denmark-2, Spain-2, Latin America
IBM and EPSON Character Sets	USA (CP437), Greek (CP437-G), Slavic (CP437SL), Multilingual (CP850), Greek (CP851), Eastern Europe (CP852), Turkish (CP 853), Cyrillic (CP855), Turkish (CP857), Euro PC Multilingual (CP858), Portugal (CP860), Hebrew (CP862), Canada/France (CP863), Arabic (CP864), Denmark/Norway (CP865), Russian (CP866), Turkish2 (CP867), OCR-A (CP876), OCR-B (CP877), Farsi (CP 1098), Latin 2 Windows (CP1250), Cyrillic Windows (CP 1251), Latin 1 Windows (CP 1252), Greek Windows (CP 1253), Turkish Windows (CP 1254), Hebrew Windows (CP 1255), Arabic Windows (CP1256), Baltic Windows (CP1257), 96 GREEK, GOST, TASS, MAZOWIA, UKRANIAN, KOI8-U
ISO Character Sets	8859/1 (Latin1), 8859/2 (Latin2), 8859/3 (Latin3), 8859/4 (Latin4), 8859/5 (Latin/Cyrillic), 8859/6 (Latin/Arabic), 8859/7 (Latin/Greek), 8859/8 (Latin/Hebrew), 8859/9 (Latin5). 8859/15 (Latin9)

Bar Codes
UPC-A, UPC-E, EAN-8, EAN-13, UPC-EAN 2, UPC-EAN 5, Code GP, MSI Plessey, Code BCD, C2/5-3 BAR, Code 39, Code 128, Code 11, Code 93, Codabar, 2/5 Bidirectional, 2/5 Interleaved, 2/5 Industrial, 2/5 Matrix, Postnet

Emulations	
- EPSON LQ Series (ESC/P)	- IBM Proprinter XL24 AGM
	- IBM Personal Printer 2391+

Paper Handling

Base Configuration		
FRONT1 PUSH TRACTOR		
Fanfold width:	76 to 432 mm	(3 to 17 inches)
Copies:	1 original + 7 copies	Max. thickness 0,635 mm (0.025 inches)

Options		
FRONT2 PUSH TRACTOR (option)		
Fanfold width:	76 to 432 mm	(3 to 17 inches)
Copies:	1 original + 7 copies	Max. thickness 0,635 mm (0.025 inches)
REAR PULL TRACTOR (option)		
Fanfold width:	76 to 432 mm	(3 to 17 inches)
Copies:	1 original + 7 copies	Max. thickness 0,3 mm (0.014 inches)
Push-Pull Feeding: Front fanfold insertion with lower tractor in front push mode and rear tractor in pull mode.		

Standard Functions
• Automatic print head gap adjustment (AGA)
• Automatic paper path switching via operator panel or S/W commands
• Paper parking
• Plug & Play capability
• Bar Code printing
• Automatic fanfold positioning for tear-off, selectable time-out
• Setting and storage of paper format and print conditions for each paper path in the non volatile memory
• Printing of the macro characters using the Compuprint native commands

Physical and Electrical Characteristics

Interfaces	
Parallel	Centronics Compatible Bi-directional (IEEE-1284) nibble and byte modes - 36 pin Amphenol connector, 7/8 data bits
	Receive Buffer: max. 128 Kbytes
Serial	RS-232/C and RS-422/A - dB 25 connector
	Baud Rate: 300 to 38400 bps, 7/8 data bits, DTR & XonXoff flow Receive Buffer: max. 128 Kbytes
Automatic interface switching	

Noise Level
< 54 dBA

Reliability	
MTBF	Mean Time between failure: 10000 hours at 25% DC
MTTR	Mean Time To Repair: 30 minutes
Workload	57200 pages/month (ECMA 132 - 4 hours for 22 days)
Printer Life	5 years or 10000 hours @25%
Duty Cycle	Operating: no limitations

Power Supply	
UNIVERSAL	From 90 to 244 VAC
Power Output	Max. 215 W
Power Consumption	Standby: less than 30 W---- Average Printing: 120 W

Environment Conditions		
Storage Conditions		
	Temperature	-40° to 50° C
	Relative Humidity	10%t o 90% RH (non condensing)
Operating Conditions		
	Temperature	10° to 38° C
	Relative Humidity	10 % to 90 % RH (non condensing)
Paper Conditions		
	Temperature	16° to 24° C
	Relative Humidity	40% to 60% RH (non condensing)

Physical dimensions	
Height	315 mm (12,21 inches)
Width	670 mm (26,18 inches)
Depth	390 mm (15,35 inches)
Weight	18 kg (44,15 lbs)

Consumables

Black ribbon 'Long Life' cartridge (20 million characters)	PRKN707-1
Color ribbon cartridge (2 million characters for each band)	PRKN408-1

Options

Additional 4 pin Rear Pull Tractor (for push-pull fanfold handling)	PRF9000
Additional 6 pin Front2 Push Tractor	PRFN103
Cutter	PRFN088
Ethernet 10/100 Base T LAN Interface Card	PRAN102
Two Level Floor Pedestal (Tilt pedestal)	PRFN406-000
Three Level Floor Pedestal (Stationary pedestal)	PRFN405-000

Standards

ESD IEC 801-2, CE Mark
UL 1950; CSA 22.2 n.950; FCC rules part 15, subpart J, class b
NEWKO-TSE (74-SEX) 203/92; EN 60950; IEC 950
VFG 243/91;VFG 46/92; VDE 875 cl.B; CISPR 22/EN 55022-class B
R.P.M. (cert. by VDE)
ISO 7779; ISO 9296
ECMA 8, 11, 132